NEUHÄUSER

represented by: CONTROX
A NEUHÄUSER COMPANY

CATALOG en
CATALOGO es

Circular Saw Blades
Sierras circulares

Side Milling Cutters
Fresas de disco

Customized Precision since 1906

CONTROX
A NEUHÄUSER COMPANY

Precision in third generation
Precisión en la tercera generación

SPECIALIZATION FOR MORE THAN 115 YEARS

Gustav Neuhäuser founded the company in 1906 with the vision of crafting high-precision cutting tools for metalworking. For more than a century, we have been developing competent solutions FOR and WITH our customers for their machining requirements.

Highly specialized unique and standard tools, perfectly adapted to their respective machining task, form the center of our innovations and services.

Our team of qualified specialists continuously develops the technical specifications of our tools to optimize performance.

ESPECIALIZACIÓN DURANTE MÁS DE 115 AÑOS

Gustav Neuhäuser fundó la empresa en 1906 con el objetivo de fabricar herramientas de corte de alta precisión para el trabajo en metal. Durante más de un siglo, hemos desarrollado soluciones competentes PARA y CON nuestros clientes para satisfacer sus requisitos de mecanizado.

El centro de nuestras innovaciones y servicios lo constituyen herramientas altamente especializadas y estándar, adaptadas perfectamente a su respectiva tarea de mecanizado.

Nuestro equipo de especialistas cualificados desarrolla continuamente las especificaciones técnicas de nuestras herramientas con el fin de optimizar el rendimiento.

Cutting tools from specialists
Herramientas de corte de especialistas

HIGH-END SOLUTIONS FOR YOUR REQUIREMENTS

Customer-specific tools are our specialty: Are you looking for a tool in dimensions which are not listed in a catalog? Or do you need support to optimize the performance of your process in terms of surface, tool life and machining time? NEUHÄUSER is at your disposal with its extensive knowledge of cutting materials, coatings and cutting geometries. All with the aim of finding the most economical solution for your cutting, slot milling or profile milling process.

Our application engineers will support and advise you during the planning phase of your process. This is how we develop your precision cutting tool together with you – perfectly matched to your process.

SOLUCIONES DE ALTA GAMA PARA SATISFACER SUS REQUISITOS

Nuestra especialidad son herramientas específicas para el cliente: ¿Está buscando una herramienta en unas dimensiones que no se indican en el catálogo? ¿O bien necesita ayuda para optimizar el rendimiento de su proceso en cuanto a superficie, vida útil de la herramienta y tiempo de mecanizado? NEUHÄUSER está a su disposición con sus amplios conocimientos en materiales de corte, recubrimientos y geometrías de corte. Todo ello con la finalidad de encontrar la solución más rentable para su proceso de corte, de fresado de ranuras o de fresado de perfiles.
Nuestros ingenieros de aplicaciones le ayudarán y asesorarán durante la fase de planificación de su proceso. Así es cómo desarrollamos su herramienta de corte de precisión junto con usted, perfectamente adaptada a su proceso.

OUR HIGH-END-TOOLS:

- made of selected carbides, high speed and cobalt steels
- toothed with innovative cutting edge geometries
- coated with PVD or CVD coatings
- manufactured on high-precision CNC grinding centers
- in combination with an optimal heat treatment

Our sales representatives and technicians are at your service for your individual specialist advice.

NUESTRAS HERRAMIENTAS DE ALTA GAMA:

- *fabricadas con carburos seleccionados, aceros de alta velocidad y aceros aleados con cobalto*
- *dentados con geometrías innovadoras*
- *con recubrimientos de PVD o CVD*
- *fabricadas en centros de mecanizado CNC de alta precisión*
- *en combinación con un tratamiento térmico óptimo*

Nuestros representantes de ventas y técnicos están a su entera disposición para ofrecerle asesoramiento experto personalizado.

PRODUCTION WITH COMPETENCE

With many years of experience, our own mechanical engineering and continuous development of our employees form the basis for a precise implementation of your requirements via tools with the highest precision. Based on our extensive stock of raw materials and semi-finished products, we can guarantee you short and reliable delivery times.

FABRICACIÓN COMPETENTE

Con muchos años de experiencia, nuestra propia ingeniería mecánica y el desarrollo continuo de nuestros empleados constituyen la base de una implementación precisa de sus requisitos mediante herramientas con la máxima precisión. Sobre la base de nuestro gran stock de materias primas y productos semiacabados, podemos garantizarle tiempos de suministro breves y fiables.

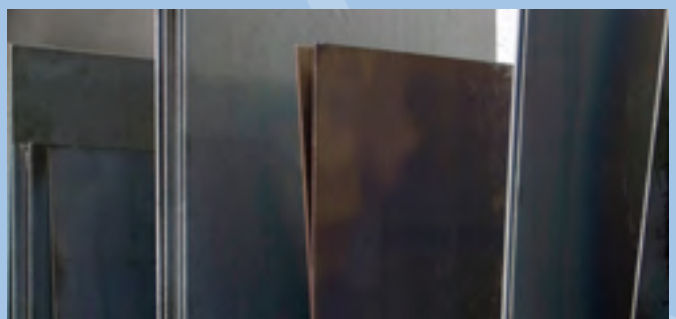

PRECISION IN TOOLS

PRECISIÓN EN HERRAMIENTAS DE CORTE

PRECISION THROUGH INNOVATION

State-of-the-art and extremely flexible machines for the manufacture of precision tool series of any batch size produced in our production center in Prüm.

Our design department creates the best production conditions through individualized and automated machines that deliver the highest level of efficiency. Optimal conditions for tomorrow's cutting edge geometry.

PRECISIÓN A TRAVÉS DE LA INNOVACIÓN

Máquinas de altas prestaciones y muy fiables para la fabricación de herramientas de precisión en serie en cualquier tamaño manufacturadas en nuestro centro de producción en Prüm.

Nuestro departamento de diseño crea las mejores condiciones de producción mediante máquinas personalizadas y automatizadas que proporcionan el máximo nivel de eficiencia. Condiciones óptimas para la fabricación de herramientas de corte en geometrías innovadoras.

OPTIMUM HARDNESS – IN-HOUSE VACUUM HARDENING SYSTEMS

Precisely controlled vacuum hardening guarantees a reliable setting of the tool hardness and toughness and thus lays the foundation for the wear resistance of our high-speed and cobalt steel tools.

DUREZA ÓPTIMA – SISTEMAS DE TEMPLE EN VACÍO PROPIOS EN LA EMPRESA

El temple en vacío controlado con precisión garantiza un ajuste fiable de la dureza y la resistencia de la herramienta, lo que sienta la base para la resistencia al desgaste de nuestras herramientas de corte de alta velocidad y de aceros aleados al cobalto.

COATINGS: AGAINST WEAR AND ADHESION

Modern PVD and CVD coatings can significantly increase the efficiency of cutting tools. But which coating is the right one? Depending on the workpiece material to be machined and other process conditions, we can provide a large portfolio of different coatings to minimize wear and friction.
We'll gladly advise you.

RECUBRIMIENTOS: CONTRA EL DESGASTE Y LA ADHESIÓN

Los modernos recubrimientos de PVD (deposición física de vapor) o CVD (deposición química de vapor) pueden aumentar considerablemente la eficacia de las herramientas de corte. ¿Pero qué recubrimiento es el adecuado? En función del material de la pieza de trabajo que debe mecanizarse y otras condiciones del proceso, podemos ofrecer una amplia gama de distintos recubrimientos para minimizar el desgaste y la fricción.
Estaremos encantados de asesorarle.

Applications around the world
Aplicaciones en todo el mundo

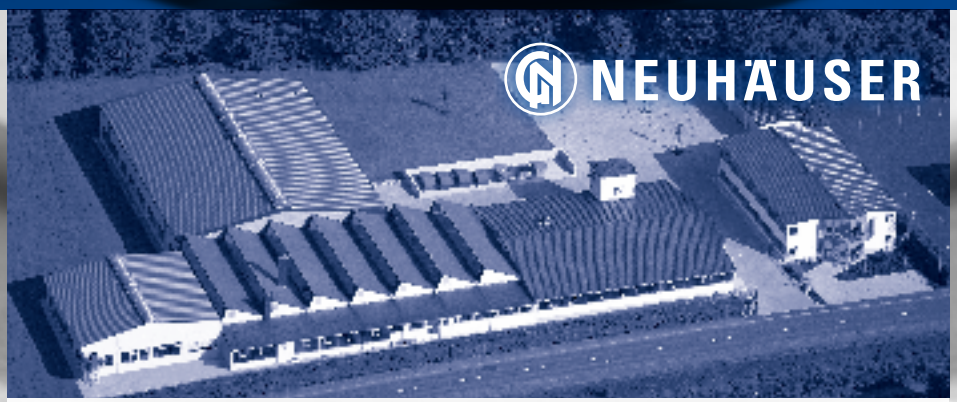

NEUHÄUSER Präzisionswerkzeuge GmbH is a sales, development and production center that serves all markets in Europe, Asia, Africa and South America. CONTROX Inc. in Springfield, Ohio, is a 100% subsidiary of NEUHÄUSER Präzisionswerkzeuge GmbH and serves the North and Central American markets. This ensures optimal support for all customers.

Together with our sales partners, we offer you direct and competent contact partners for your individual requirements on site.

NEUHÄUSER Präzisionswerkzeuge GmbH es un centro de ventas, desarrollo y producción que suministra a todos los mercados de Europa, Asia, África y América del Sur. CONTROX Inc. en Springfield, Ohio, es una filial al 100 % de NEUHÄUSER Präzisionswerkzeuge GmbH que provee a los mercados de América del Norte y América Central. De este modo, se garantiza un soporte óptimo para todos los clientes.

Junto con nuestros socios de ventas, le ofrecemos socios de contacto directos y competentes para sus requisitos individuales in situ.

CONTROX
A NEUHÄUSER COMPANY

Table of content

Contenido

Recommendations for tool selection
Recomendaciones para la selección de herramientas

MATERIALS

A **very stable process** is required for the usage of **solid carbide saws.** In addition to a **rigid mounting of the saw on a low-vibration machine,** this also includes a **stable clamping of the work piece.**
In other case, we recommend the use of circular saw blades made of HSS or HSS-Co.

NUMBER OF TEETH

In general, we recommend a minimum of two teeth – three in case of staggered toothing – and a maximum of five teeth engaged. **Three teeth engaged are considered ideal** to avoid vibrations and excessive cutting pressures. In the catalog you should select the saw closest to the ideal number of teeth.

Information on feed rate and cutting speed can be found in chapter "Technical Data & Explanations" on page 54.

TOOTH FORM

Information on tooth forms can be found in the Appendix "Technical Data & Explanations" starting on page 52.

COATINGS

In order to maximize economic efficiency, **various coatings can be applied to our catalog cutting tools.** Please contact our application engineers, who will issue a **corresponding coating recommendation.**

MATERIALES

*Para el uso de **sierras de metal duro** es necesario un **proceso muy estable**. Además de un **montaje rígido de la sierra en una máquina con pocas vibraciones,** esto también incluye una **sujeción estable de la pieza a cortar.***
De lo contrario, recomendamos utilizar sierras circulares de metal de acero rápido (HSS) o acero rápido aleado con cobalto (HSS-Co).

NÚMERO DE DIENTES

*Por lo general, recomendamos un mínimo de dos dientes, tres en caso de dentado escalonado, y un máximo de cinco dientes engranados. Para evitar vibraciones y presiones de corte excesivas, el número que se **considera ideal son tres dientes engranados**. En el catálogo debería seleccionar la sierra que más se acerque al número ideal de dientes.*
Encontrará información sobre la velocidad de alimentación y de corte en el capítulo «Datos técnicos y explicaciones» en la página 54.

FORMA DEL DIENTE

Encontrará información sobre las formas del diente en el Anexo en la página 52.

REVESTIMIENTOS

*Para maximizar la rentabilidad pueden aplicarse **distintos revestimientos a nuestras herramientas de corte del catálogo.** Póngase en contacto con nuestros ingenieros de aplicación para que le envíen la **correspondiente recomendación de revestimiento.***

Circular Saw Blades

Sierras circulares

	product-type *tipo de producto*	material *materiales*	tooth pitch *inclinación del diente*	tooth form *forma del diente*	cat.-No. cat.-No.	page página
inch – Imperial Sizes / *Tamaños en pulgadas*	**Circular Saw Blades** ***Sierras circulares***	Solid Carbide *metal duro*	fine *fino*	SawCut A	**1350**	**10–12**
	Circular Saw Blades ***Sierras circulares***	Solid Carbide *metal duro*	coarse *grueso*	SawCut B	**1250**	**13–15**
	Circular Saw Blades ***Sierras circulares***	HSS HSS-Co	fine *fino*	SawCut A ECO	**1160**	**16–18**
	Circular Saw Blades ***Sierras circulares***	HSS HSS-Co	coarse *grueso*	SawCut B ECO	**1260**	**19–20**
	Straight Shank Saw Holder ***Mango portasierra circular***				**6500**	**21**
mm – Metric Sizes / *tamaños métricos*	**Circular Saw Blades** ***Sierras circulares***	Solid Carbide *metal duro*	fine *fino*	SawCut A	**5110**	**22–24**
	Circular Saw Blades ***Sierras circulares***	Solid Carbide *metal duro*	coarse *grueso*	SawCut B	**5120**	**25–27**
	Circular Saw Blades ***Sierras circulares*** for/para Rhobi-/Pressta- ...	Solid Carbide *metal duro*	customized *personalizado*		**5130**	**28**
	Circular Saw Blades ***Sierras circulares***	HSS	fine *fino*	SawCut A ECO	**1100**	**29–31**
	Circular Saw Blades ***Sierras circulares***	HSS	coarse *grueso*	SawCut B ECO	**1200**	**32–33**
	Circular Saw Blades for Jewelry ***Sierras circulares*** *para la joyería*	HSS	extra fine *extra fino*	SawCut A ECO	**1620**	**34**

SPECIAL DIMENSIONS OR SPECIAL APPLICATIONS?

Talk to us. We are happy to manufacture **custom-made products for you in regard to tool dimensions, tooth geometries, interfaces, cutting materials and coatings.**
For **special inquiries** please contact us or use our **forms on www.controx.com** (link on page 46/47).

¿DIMENSIONES ESPECIALES O APLICACIONES ESPECIALES?

*Póngase en contacto con nosotros. Estaremos encantados de fabricar **productos personalizados para usted en cuanto a las dimensiones de la herramienta, las geometrías del dentado, las interfaces, los materiales de corte y los revestimientos.** Para **peticiones especiales** consúltenos o bien utilice nuestros **formularios en www.controx.com** (enlace en la página 46/47).*

Circular Saw Blades

fine pitch · SawCut A

Sierras circulares

acabado fino · SawCut A

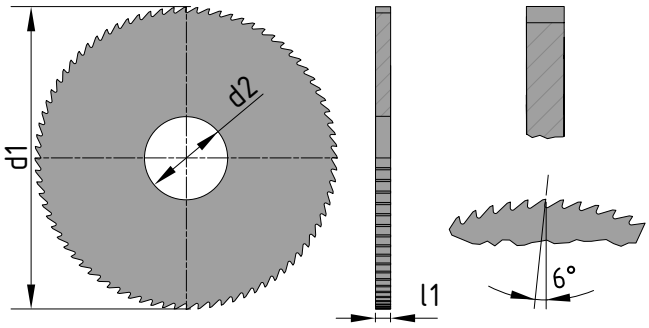

material/ *materiales*	optional modification/ *modificación opcional*	Tolerances / *tolerancias* (inch)					
		d_1		ℓ_1	d_2 – H6 ANSI		
Solid Carbide *metal duro*	coatings / *revestimiento*	1"- 4"	± .0039"	± .0006"	⅜ - ⅝"	+.0004"	
					1"	+.0005"	

APPLICATION:

For shallow to medium slotting and cutoff operations in solid or thin-walled materials.
Ideal for abrasive and high-tensile materials.

APLICACIÓN:

Para operaciones de ranurado y corte de poca profundidad a profundidad media en materiales sólidos o de paredes finas.
Ideales para materiales abrasivos y de gran resistencia.

	d_1 (inch) outer-Ø / *Ø ext.*	ℓ_1 (inch) width/*ancho*	d_2 (inch) bore-Ø/ *Ø agujero*	**teeth *dientes***	**d3** (inch) hub-Ø / *isla hub*	a_e **max.** (inch)	**Cat.-No.**	**Item-No.**
inch Imperial Sizes / *Tamaños en pulgadas*	1	0.0100	⅜	40	–	0.15	1350	1350 025 025 0001
	1	0.0120	⅜	40	–	0.15	1350	1350 025 030 0001
	1	0.0140	⅜	40	–	0.15	1350	1350 025 035 0001
	1	0.0156	⅜	40	–	0.15	1350	1350 025 039 0001
	1	0.0180	⅜	40	–	0.15	1350	1350 025 045 0001
	1	0.0200	⅜	40	–	0.15	1350	1350 025 050 0001
	1	0.0250	⅜	40	–	0.15	1350	1350 025 063 0001
	1	0.0313	⅜	40	–	0.15	1350	1350 025 079 0001
	1	0.0400	⅜	40	–	0.15	1350	1350 025 101 0001
	1	0.0469	⅜	40	–	0.15	1350	1350 025 119 0001
	1	0.0625	⅜	40	–	0.15	1350	1350 025 158 0001
	1	0.0781	⅜	40	–	0.15	1350	1350 025 198 0001
	1 ¼	0.0100	½	50	–	0.21	1350	1350 031 025 0001
	1 ¼	0.0120	½	50	–	0.21	1350	1350 031 030 0001
	1 ¼	0.0140	½	50	–	0.21	1350	1350 031 035 0001
	1 ¼	0.0156	½	50	–	0.21	1350	1350 031 039 0001
	1 ¼	0.0180	½	50	–	0.21	1350	1350 031 045 0001
	1 ¼	0.0200	½	50	–	0.21	1350	1350 031 050 0001
	1 ¼	0.0250	½	50	–	0.21	1350	1350 031 063 0001
	1 ¼	0.0313	½	50	–	0.21	1350	1350 031 079 0001
	1 ¼	0.0400	½	50	–	0.21	1350	1350 031 101 0001
	1 ¼	0.0469	½	50	–	0.21	1350	1350 031 119 0001
	1 ¼	0.0625	½	50	–	0.21	1350	1350 031 158 0001
	1 ¼	0.0781	½	50	–	0.21	1350	1350 031 198 0001
	1 ¼	0.0938	½	50	–	0.21	1350	1350 031 238 0001

Contd on next page / *Continúa en la página siguiente*

inch Imperial Sizes / *Tamaños en pulgadas*

d_1 (inch) outer-Ø / *Ø ext.*	ℓ_1 (inch) width/*ancho*	d_2 (inch) bore-Ø/ *Ø agujero*	teeth *dientes*	d3 (inch) hub-Ø / *isla hub*	a_e max. (inch)	Cat.-No.	Item-No.
1 ½	0.0100	½	60	–	0.34	1350	1350 038 025 0001
1 ½	0.0120	½	60	–	0.34	1350	1350 038 030 0001
1 ½	0.0140	½	60	–	0.34	1350	1350 038 035 0001
1 ½	0.0156	½	60	–	0.34	1350	1350 038 039 0001
1 ½	0.0180	½	60	–	0.34	1350	1350 038 045 0001
1 ½	0.0200	½	60	–	0.34	1350	1350 038 050 0001
1 ½	0.0250	½	60	–	0.34	1350	1350 038 063 0001
1 ½	0.0313	½	60	–	0.34	1350	1350 038 079 0001
1 ½	0.0400	½	60	–	0.34	1350	1350 038 101 0001
1 ½	0.0469	½	60	–	0.34	1350	1350 038 119 0001
1 ½	0.0625	½	60	–	0.34	1350	1350 038 158 0001
1 ½	0.0781	½	60	–	0.34	1350	1350 038 198 0001
1 ½	0.0938	½	60	–	0.34	1350	1350 038 238 0001
1 ½	0.1250	½	60	–	0.34	1350	1350 038 317 0001
1 ¾	0.0100	½	70	–	0.46	1350	1350 044 025 0001
1 ¾	0.0120	½	70	–	0.46	1350	1350 044 030 0001
1 ¾	0.0140	½	70	–	0.46	1350	1350 044 035 0001
1 ¾	0.0156	½	70	–	0.46	1350	1350 044 039 0001
1 ¾	0.0180	½	70	–	0.46	1350	1350 044 045 0001
1 ¾	0.0200	½	70	–	0.46	1350	1350 044 050 0001
1 ¾	0.0250	½	70	–	0.46	1350	1350 044 063 0001
1 ¾	0.0313	½	70	–	0.46	1350	1350 044 079 0001
1 ¾	0.0400	½	70	–	0.46	1350	1350 044 101 0001
1 ¾	0.0469	½	70	–	0.46	1350	1350 044 119 0001
1 ¾	0.0625	½	70	–	0.46	1350	1350 044 158 0001
1 ¾	0.0781	½	70	–	0.46	1350	1350 044 198 0001
1 ¾	0.0938	½	70	–	0.46	1350	1350 044 238 0001
1 ¾	0.1250	½	70	–	0.46	1350	1350 044 317 0001
2	0.0100	½	80	–	0.59	1350	1350 050 025 0001
2	0.0120	½	80	–	0.59	1350	1350 050 030 0001
2	0.0140	½	80	–	0.59	1350	1350 050 035 0001
2	0.0156	½	80	–	0.59	1350	1350 050 039 0001
2	0.0180	½	80	–	0.59	1350	1350 050 045 0001
2	0.0200	½	80	–	0.59	1350	1350 050 050 0001
2	0.0250	½	80	–	0.59	1350	1350 050 063 0001
2	0.0313	½	80	–	0.59	1350	1350 050 079 0001
2	0.0400	½	80	–	0.59	1350	1350 050 101 0001
2	0.0469	½	80	–	0.59	1350	1350 050 119 0001
2	0.0625	½	80	–	0.59	1350	1350 050 158 0001
2	0.0781	½	80	–	0.59	1350	1350 050 198 0001
2	0.0938	½	80	–	0.59	1350	1350 050 238 0001
2	0.1250	½	80	–	0.59	1350	1350 050 317 0001
2 ¼	0.0100	⅝	90	–	0.59	1350	1350 057 025 0001
2 ¼	0.0120	⅝	90	–	0.59	1350	1350 057 030 0001
2 ¼	0.0140	⅝	90	–	0.59	1350	1350 057 035 0001
2 ¼	0.0156	⅝	90	–	0.59	1350	1350 057 039 0001
2 ¼	0.0180	⅝	90	–	0.59	1350	1350 057 045 0001
2 ¼	0.0200	⅝	90	–	0.59	1350	1350 057 050 0001
2 ¼	0.0250	⅝	90	–	0.59	1350	1350 057 063 0001
2 ¼	0.0313	⅝	90	–	0.59	1350	1350 057 079 0001
2 ¼	0.0400	⅝	90	–	0.59	1350	1350 057 101 0001
2 ¼	0.0469	⅝	90	–	0.59	1350	1350 057 119 0001
2 ¼	0.0625	⅝	90	–	0.59	1350	1350 057 158 0001
2 ¼	0.0781	⅝	90	–	0.59	1350	1350 057 198 0001
2 ¼	0.0938	⅝	90	–	0.59	1350	1350 057 238 0001
2 ¼	0.1250	⅝	90	–	0.59	1350	1350 057 317 0001

Contd on next page / *Continúa en la página siguiente*

	d_1 (inch) outer-Ø / *Ø ext.*	ℓ_1 (inch) width/*ancho*	d_2 (inch) bore-Ø/ *Ø agujero*	**teeth** ***dientes***	**d3** (inch) hub-Ø / *isla hub*	a_e **max.** (inch)	**Cat.-No.**	**Item-No.**
inch Imperial Sizes / *Tamaños en pulgadas*	2 ½	0.0100	1	80	–	0.46	1350	1350 063 025 0001
	2 ½	0.0120	1	80	–	0.46	1350	1350 063 030 0001
	2 ½	0.0140	1	80	–	0.46	1350	1350 063 035 0001
	2 ½	0.0156	1	80	–	0.46	1350	1350 063 039 0001
	2 ½	0.0180	1	80	–	0.46	1350	1350 063 045 0001
	2 ½	0.0200	1	80	–	0.46	1350	1350 063 050 0001
	2 ½	0.0250	1	80	–	0.46	1350	1350 063 063 0001
	2 ½	0.0313	1	80	–	0.46	1350	1350 063 079 0001
	2 ½	0.0400	1	80	–	0.46	1350	1350 063 101 0001
	2 ½	0.0469	1	80	–	0.46	1350	1350 063 119 0001
	2 ½	0.0625	1	80	–	0.46	1350	1350 063 158 0001
	2 ½	0.0781	1	80	–	0.46	1350	1350 063 198 0001
	2 ½	0.0938	1	80	–	0.46	1350	1350 063 238 0001
	2 ½	0.1250	1	80	–	0.46	1350	1350 063 317 0001
	2 ¾	0.0100	1	88	–	0.59	1350	1350 069 025 0001
	2 ¾	0.0120	1	88	–	0.59	1350	1350 069 030 0001
	2 ¾	0.0140	1	88	–	0.59	1350	1350 069 035 0001
	2 ¾	0.0156	1	88	–	0.59	1350	1350 069 039 0001
	2 ¾	0.0180	1	88	–	0.59	1350	1350 069 045 0001
	2 ¾	0.0200	1	88	–	0.59	1350	1350 069 050 0001
	2 ¾	0.0250	1	88	–	0.59	1350	1350 069 063 0001
	2 ¾	0.0313	1	88	–	0.59	1350	1350 069 079 0001
	2 ¾	0.0400	1	88	–	0.59	1350	1350 069 101 0001
	2 ¾	0.0469	1	88	–	0.59	1350	1350 069 119 0001
	2 ¾	0.0625	1	88	–	0.59	1350	1350 069 158 0001
	2 ¾	0.0781	1	88	–	0.59	1350	1350 069 198 0001
	2 ¾	0.0938	1	88	–	0.59	1350	1350 069 238 0001
	2 ¾	0.1250	1	88	–	0.59	1350	1350 069 317 0001
	3	0.0120	1	96	–	0.71	1350	1350 076 030 0001
	3	0.0140	1	96	–	0.71	1350	1350 076 035 0001
	3	0.0156	1	96	–	0.71	1350	1350 076 039 0001
	3	0.0180	1	96	–	0.71	1350	1350 076 045 0001
	3	0.0200	1	96	–	0.71	1350	1350 076 050 0001
	3	0.0250	1	96	–	0.71	1350	1350 076 063 0001
	3	0.0313	1	96	–	0.71	1350	1350 076 079 0001
	3	0.0400	1	96	–	0.71	1350	1350 076 101 0001
	3	0.0469	1	96	–	0.71	1350	1350 076 119 0001
	3	0.0625	1	96	–	0.71	1350	1350 076 158 0001
	3	0.0781	1	96	–	0.71	1350	1350 076 198 0001
	3	0.0938	1	96	–	0.71	1350	1350 076 238 0001
	3	0.1250	1	96	–	0.71	1350	1350 076 317 0001
	4	0.0156	1	128	–	1.21	1350	1350 101 039 0001
	4	0.0180	1	128	–	1.21	1350	1350 101 045 0001
	4	0.0200	1	128	–	1.21	1350	1350 101 050 0001
	4	0.0250	1	128	–	1.21	1350	1350 101 063 0001
	4	0.0313	1	128	–	1.21	1350	1350 101 079 0001
	4	0.0400	1	128	–	1.21	1350	1350 101 101 0001
	4	0.0469	1	128	–	1.21	1350	1350 101 119 0001
	4	0.0625	1	128	–	1.21	1350	1350 101 158 0001
	4	0.0781	1	128	–	1.21	1350	1350 101 198 0001
	4	0.0938	1	128	–	1.21	1350	1350 101 238 0001
	4	0.1250	1	128	–	1.21	1350	1350 101 317 0001

Special tools on request. | *Herramientas especiales bajo pedido.*

for metric sizes / *para tamaños en mm*: Art. 5110 · p. 22-24

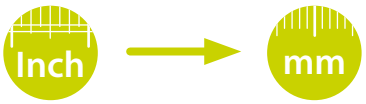

Circular Saw Blades

coarse pitch · SawCut B

Sierras circulares

acabado grueso · SawCut B

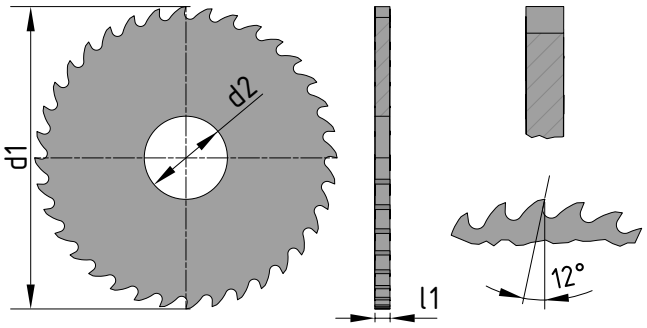

material/ *materiales*	optional modification/ *modificación opcional*	Tolerances / *tolerancias* (inch)		
		d_1	ℓ_1	d_2 – H6 ANSI
Solid Carbide ***metal duro***	coatings / *revestimiento*	1"- 4" ± .0039"	± .0006"	⅜ - ⅝" +.0004" 1" +.0005"

APPLICATION:

For medium to deep slotting and cutoff operations in solid or thick-walled materials.
Ideal for abrasive and high-tensile materials.

APLICACIÓN:

Para operaciones de ranurado y corte de profundidad media a profunda en materiales sólidos o de paredes finas.
Ideales para materiales abrasivos y de gran resistencia.

	d_1 (inch) outer-Ø / *Ø ext.*	ℓ_1 (inch) width/*ancho*	d_2 (inch) bore-Ø/ *Ø agujero*	**teeth** ***dientes***	d3 (inch) hub-Ø / *isla hub*	a_e max. (inch)	Cat.-No.	Item-No.
inch Imperial Sizes / *Tamaños en pulgadas*	1	0.0100	⅜	20	–	0.15	1250	1250 025 025 0001
	1	0.0120	⅜	20	–	0.15	1250	1250 025 030 0001
	1	0.0140	⅜	20	–	0.15	1250	1250 025 035 0001
	1	0.0156	⅜	20	–	0.15	1250	1250 025 039 0001
	1	0.0180	⅜	20	–	0.15	1250	1250 025 045 0001
	1	0.0200	⅜	20	–	0.15	1250	1250 025 050 0001
	1	0.0250	⅜	20	–	0.15	1250	1250 025 063 0001
	1	0.0313	⅜	20	–	0.15	1250	1250 025 079 0001
	1	0.0400	⅜	20	–	0.15	1250	1250 025 101 0001
	1	0.0469	⅜	20	–	0.15	1250	1250 025 119 0001
	1	0.0625	⅜	20	–	0.15	1250	1250 025 158 0001
	1	0.0781	⅜	20	–	0.15	1250	1250 025 198 0001
	1 ¼	0.0100	½	24	–	0.21	1250	1250 031 025 0001
	1 ¼	0.0120	½	24	–	0.21	1250	1250 031 030 0001
	1 ¼	0.0140	½	24	–	0.21	1250	1250 031 035 0001
	1 ¼	0.0156	½	24	–	0.21	1250	1250 031 039 0001
	1 ¼	0.0180	½	24	–	0.21	1250	1250 031 045 0001
	1 ¼	0.0200	½	24	–	0.21	1250	1250 031 050 0001
	1 ¼	0.0250	½	24	–	0.21	1250	1250 031 063 0001
	1 ¼	0.0313	½	24	–	0.21	1250	1250 031 079 0001
	1 ¼	0.0400	½	24	–	0.21	1250	1250 031 101 0001
	1 ¼	0.0469	½	24	–	0.21	1250	1250 031 119 0001
	1 ¼	0.0625	½	24	–	0.21	1250	1250 031 158 0001
	1 ¼	0.0781	½	24	–	0.21	1250	1250 031 198 0001
	1 ¼	0.0938	½	24	–	0.21	1250	1250 031 238 0001

Contd on next page / *Continúa en la página siguiente*

inch Imperial Sizes / *Tamaños en pulgadas*

d_1 (inch) outer-Ø / *Ø ext.*	ℓ_1 (inch) width/*ancho*	d_2 (inch) bore-Ø/ *Ø agujero*	teeth *dientes*	d3 (inch) hub-Ø / *isla hub*	a_e max. (inch)	Cat.-No.	Item-No.
1 ½	0.0100	½	30	–	0.34	1250	1250 038 025 0001
1 ½	0.0120	½	30	–	0.34	1250	1250 038 030 0001
1 ½	0.0140	½	30	–	0.34	1250	1250 038 035 0001
1 ½	0.0156	½	30	–	0.34	1250	1250 038 039 0001
1 ½	0.0180	½	30	–	0.34	1250	1250 038 045 0001
1 ½	0.0200	½	30	–	0.34	1250	1250 038 050 0001
1 ½	0.0250	½	30	–	0.34	1250	1250 038 063 0001
1 ½	0.0313	½	30	–	0.34	1250	1250 038 079 0001
1 ½	0.0400	½	30	–	0.34	1250	1250 038 101 0001
1 ½	0.0469	½	30	–	0.34	1250	1250 038 119 0001
1 ½	0.0625	½	30	–	0.34	1250	1250 038 158 0001
1 ½	0.0781	½	30	–	0.34	1250	1250 038 198 0001
1 ½	0.0938	½	30	–	0.34	1250	1250 038 238 0001
1 ½	0.1250	½	30	–	0.34	1250	1250 038 317 0001
1 ¾	0.0100	½	34	–	0.46	1250	1250 044 025 0001
1 ¾	0.0120	½	34	–	0.46	1250	1250 044 030 0001
1 ¾	0.0140	½	34	–	0.46	1250	1250 044 035 0001
1 ¾	0.0156	½	34	–	0.46	1250	1250 044 039 0001
1 ¾	0.0180	½	34	–	0.46	1250	1250 044 045 0001
1 ¾	0.0200	½	34	–	0.46	1250	1250 044 050 0001
1 ¾	0.0250	½	34	–	0.46	1250	1250 044 063 0001
1 ¾	0.0313	½	34	–	0.46	1250	1250 044 079 0001
1 ¾	0.0400	½	34	–	0.46	1250	1250 044 101 0001
1 ¾	0.0469	½	34	–	0.46	1250	1250 044 119 0001
1 ¾	0.0625	½	34	–	0.46	1250	1250 044 158 0001
1 ¾	0.0781	½	34	–	0.46	1250	1250 044 198 0001
1 ¾	0.0938	½	34	–	0.46	1250	1250 044 238 0001
1 ¾	0.1250	½	34	–	0.46	1250	1250 044 317 0001
2	0.0100	½	40	–	0.59	1250	1250 050 025 0001
2	0.0120	½	40	–	0.59	1250	1250 050 030 0001
2	0.0140	½	40	–	0.59	1250	1250 050 035 0001
2	0.0156	½	40	–	0.59	1250	1250 050 039 0001
2	0.0180	½	40	–	0.59	1250	1250 050 045 0001
2	0.0200	½	40	–	0.59	1250	1250 050 050 0001
2	0.0250	½	40	–	0.59	1250	1250 050 063 0001
2	0.0313	½	40	–	0.59	1250	1250 050 079 0001
2	0.0400	½	40	–	0.59	1250	1250 050 101 0001
2	0.0469	½	40	–	0.59	1250	1250 050 119 0001
2	0.0625	½	40	–	0.59	1250	1250 050 158 0001
2	0.0781	½	40	–	0.59	1250	1250 050 198 0001
2	0.0938	½	40	–	0.59	1250	1250 050 238 0001
2	0.1250	½	40	–	0.59	1250	1250 050 317 0001
2 ¼	0.0100	⅝	44	–	0.59	1250	1250 057 025 0001
2 ¼	0.0120	⅝	44	–	0.59	1250	1250 057 030 0001
2 ¼	0.0140	⅝	44	–	0.59	1250	1250 057 035 0001
2 ¼	0.0156	⅝	44	–	0.59	1250	1250 057 039 0001
2 ¼	0.0180	⅝	44	–	0.59	1250	1250 057 045 0001
2 ¼	0.0200	⅝	44	–	0.59	1250	1250 057 050 0001
2 ¼	0.0250	⅝	44	–	0.59	1250	1250 057 063 0001
2 ¼	0.0313	⅝	44	–	0.59	1250	1250 057 079 0001
2 ¼	0.0400	⅝	44	–	0.59	1250	1250 057 101 0001
2 ¼	0.0469	⅝	44	–	0.59	1250	1250 057 119 0001
2 ¼	0.0625	⅝	44	–	0.59	1250	1250 057 158 0001
2 ¼	0.0781	⅝	44	–	0.59	1250	1250 057 198 0001
2 ¼	0.0938	⅝	44	–	0.59	1250	1250 057 238 0001
2 ¼	0.1250	⅝	44	–	0.59	1250	1250 057 317 0001

Contd on next page / *Continúa en la página siguiente*

inch Imperial Sizes / *Tamaños en pulgadas*

d_1 (inch) outer-Ø / *Ø ext.*	ℓ_1 (inch) width/*ancho*	d_2 (inch) bore-Ø/ *Ø agujero*	teeth *dientes*	d3 (inch) hub-Ø / *isla hub*	a_e max. (inch)	Cat.-No.	Item-No.
2 ½	0.0100	1	40	–	0.46	1250	1250 063 025 0001
2 ½	0.0120	1	40	–	0.46	1250	1250 063 030 0001
2 ½	0.0140	1	40	–	0.46	1250	1250 063 035 0001
2 ½	0.0156	1	40	–	0.46	1250	1250 063 039 0001
2 ½	0.0180	1	40	–	0.46	1250	1250 063 045 0001
2 ½	0.0200	1	40	–	0.46	1250	1250 063 050 0001
2 ½	0.0250	1	40	–	0.46	1250	1250 063 063 0001
2 ½	0.0313	1	40	–	0.46	1250	1250 063 079 0001
2 ½	0.0400	1	40	–	0.46	1250	1250 063 101 0001
2 ½	0.0469	1	40	–	0.46	1250	1250 063 119 0001
2 ½	0.0625	1	40	–	0.46	1250	1250 063 158 0001
2 ½	0.0781	1	40	–	0.46	1250	1250 063 198 0001
2 ½	0.0938	1	40	–	0.46	1250	1250 063 238 0001
2 ½	0.1250	1	40	–	0.46	1250	1250 063 317 0001
2 ¾	0.0100	1	44	–	0.59	1250	1250 069 025 0001
2 ¾	0.0120	1	44	–	0.59	1250	1250 069 030 0001
2 ¾	0.0140	1	44	–	0.59	1250	1250 069 035 0001
2 ¾	0.0156	1	44	–	0.59	1250	1250 069 039 0001
2 ¾	0.0180	1	44	–	0.59	1250	1250 069 045 0001
2 ¾	0.0200	1	44	–	0.59	1250	1250 069 050 0001
2 ¾	0.0250	1	44	–	0.59	1250	1250 069 063 0001
2 ¾	0.0313	1	44	–	0.59	1250	1250 069 079 0001
2 ¾	0.0400	1	44	–	0.59	1250	1250 069 101 0001
2 ¾	0.0469	1	44	–	0.59	1250	1250 069 119 0001
2 ¾	0.0625	1	44	–	0.59	1250	1250 069 158 0001
2 ¾	0.0781	1	44	–	0.59	1250	1250 069 198 0001
2 ¾	0.0938	1	44	–	0.59	1250	1250 069 238 0001
2 ¾	0.1250	1	44	–	0.59	1250	1250 069 317 0001
3	0.0120	1	48	–	0.71	1250	1250 076 030 0001
3	0.0140	1	48	–	0.71	1250	1250 076 035 0001
3	0.0156	1	48	–	0.71	1250	1250 076 039 0001
3	0.0180	1	48	–	0.71	1250	1250 076 045 0001
3	0.0200	1	48	–	0.71	1250	1250 076 050 0001
3	0.0250	1	48	–	0.71	1250	1250 076 063 0001
3	0.0313	1	48	–	0.71	1250	1250 076 079 0001
3	0.0400	1	48	–	0.71	1250	1250 076 101 0001
3	0.0469	1	48	–	0.71	1250	1250 076 119 0001
3	0.0625	1	48	–	0.71	1250	1250 076 158 0001
3	0.0781	1	48	–	0.71	1250	1250 076 198 0001
3	0.0938	1	48	–	0.71	1250	1250 076 238 0001
3	0.1250	1	48	–	0.71	1250	1250 076 317 0001
4	0.0156	1	64	–	1.21	1250	1250 101 039 0001
4	0.0180	1	64	–	1.21	1250	1250 101 045 0001
4	0.0200	1	64	–	1.21	1250	1250 101 050 0001
4	0.0250	1	64	–	1.21	1250	1250 101 063 0001
4	0.0313	1	64	–	1.21	1250	1250 101 079 0001
4	0.0400	1	64	–	1.21	1250	1250 101 101 0001
4	0.0469	1	64	–	1.21	1250	1250 101 119 0001
4	0.0625	1	64	–	1.21	1250	1250 101 158 0001
4	0.0781	1	64	–	1.21	1250	1250 101 198 0001
4	0.0938	1	64	–	1.21	1250	1250 101 238 0001
4	0.1250	1	64	–	1.21	1250	1250 101 317 0001

Special tools on request. | *Herramientas especiales bajo pedido.*

for metric sizes / *para tamaños en mm*: Art. 5120 · p. 25-27

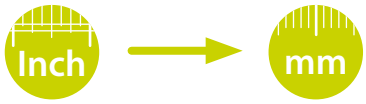

Circular Saw Blades

fine pitch · SawCut A ECO

Sierras circulares

acabado fino · SawCut A ECO

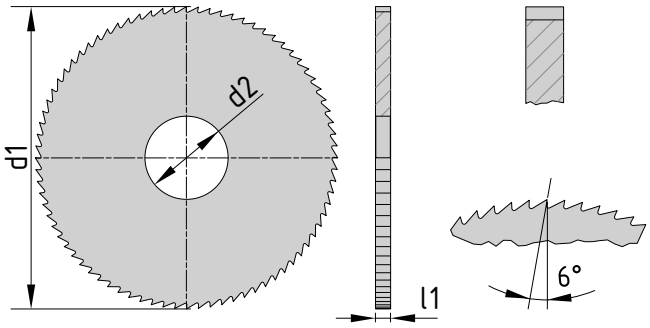

material/ *materiales*		optional modification/ *modificación opcional*	Tolerances / *tolerancias* (inch)				
			d_1		ℓ_1	d_2 – H7 ANSI	
HSS	HSS-Co	coatings and/or alternating chamfers / *revestimiento y / o chaflanes alternos*	1"- 4"	± .0039"	± .0006"	⅜ - ⅝"	+ .0004"
			5"	+ .0039" – .0078"		1"	+ .0005"
$\ell_1 \leq 0.025"$	$\ell_1 \geq 0.0313"$						

APPLICATION:

For shallow to medium slotting and cutoff operations in solid or thin-walled materials.

APLICACIÓN:

Para operaciones de ranurado y corte de poca profundidad a profundidad media en materiales sólidos o de paredes finas.

	d_1 (inch) outer-Ø / *Ø ext.*	ℓ_1 (inch) width/*ancho*	d_2 (inch) bore-Ø/ *Ø agujero*	**teeth** ***dientes***	d3 (inch) hub-Ø / *isla hub*	**keyway**	a_e max. (inch)	**Cat.-No.**	**Item-No.**
inch Imperial Sizes / *Tamaños en pulgadas*	1	0.0080	⅜	80	–	–	0.15	1160	1160 025 020 0001
	1	0.0100	⅜	80	–	–	0.15	1160	1160 025 025 0001
	1	0.0120	⅜	80	–	–	0.15	1160	1160 025 030 0001
	1	0.0140	⅜	64	–	–	0.15	1160	1160 025 035 0001
	1	0.0156	⅜	64	–	–	0.15	1160	1160 025 039 0001
	1	0.0180	⅜	64	–	–	0.15	1160	1160 025 045 0001
	1	0.0200	⅜	64	–	–	0.15	1160	1160 025 050 0001
	1	0.0250	⅜	64	–	–	0.15	1160	1160 025 063 0001
	1	0.0313	⅜	64	–	–	0.15	1160	1160 025 079 0001
	1	0.0400	⅜	64	–	–	0.15	1160	1160 025 101 0001
	1	0.0469	⅜	40	–	–	0.15	1160	1160 025 119 0001
	1	0.0625	⅜	40	–	–	0.15	1160	1160 025 158 0001
	1	0.0781	⅜	40	–	–	0.15	1160	1160 025 198 0001
	1	0.0938	⅜	40	–	–	0.15	1160	1160 025 238 0001
	1	0.1250	⅜	40	–	–	0.15	1160	1160 025 317 0001
	1 ¼	0.0100	½	100	–	–	0.21	1160	1160 031 025 0001
	1 ¼	0.0120	½	100	–	–	0.21	1160	1160 031 030 0001
	1 ¼	0.0140	½	80	–	–	0.21	1160	1160 031 035 0001
	1 ¼	0.0156	½	80	–	–	0.21	1160	1160 031 039 0001
	1 ¼	0.0180	½	80	–	–	0.21	1160	1160 031 045 0001
	1 ¼	0.0200	½	80	–	–	0.21	1160	1160 031 050 0001
	1 ¼	0.0250	½	80	–	✓	0.21	1160	1160 031 063 0001
	1 ¼	0.0313	½	80	–	✓	0.21	1160	1160 031 079 0001
	1 ¼	0.0400	½	50	–	✓	0.21	1160	1160 031 101 0001
	1 ¼	0.0469	½	50	–	✓	0.21	1160	1160 031 119 0001
	1 ¼	0.0625	½	50	–	✓	0.21	1160	1160 031 158 0001
	1 ¼	0.0781	½	50	–	✓	0.21	1160	1160 031 198 0001
	1 ¼	0.0938	½	50	–	✓	0.21	1160	1160 031 238 0001
	1 ¼	0.1250	½	50	–	✓	0.21	1160	1160 031 317 0001

Contd on next page / *Continúa en la página siguiente*

inch Imperial Sizes / *Tamaños en pulgadas*

d_1 (inch) outer-Ø / *Ø ext.*	ℓ_1 (inch) width/*ancho*	d_2 (inch) bore-Ø/ *Ø agujero*	teeth *dientes*	d3 (inch) hub-Ø / *isla hub*	keyway	a_e max. (inch)	Cat.-No.	Item-No.
1 ½	0.0100	½	96	–	–	0.34	1160	1160 038 025 0001
1 ½	0.0120	½	96	–	–	0.34	1160	1160 038 030 0001
1 ½	0.0140	½	74	–	–	0.34	1160	1160 038 035 0001
1 ½	0.0156	½	74	–	–	0.34	1160	1160 038 039 0001
1 ½	0.0180	½	74	–	–	0.34	1160	1160 038 045 0001
1 ½	0.0200	½	74	–	–	0.34	1160	1160 038 050 0001
1 ½	0.0250	½	74	–	✓	0.34	1160	1160 038 063 0001
1 ½	0.0313	½	74	–	✓	0.34	1160	1160 038 079 0001
1 ½	0.0400	½	48	–	✓	0.34	1160	1160 038 101 0001
1 ½	0.0469	½	48	–	✓	0.34	1160	1160 038 119 0001
1 ½	0.0625	½	48	–	✓	0.34	1160	1160 038 158 0001
1 ½	0.0781	½	48	–	✓	0.34	1160	1160 038 198 0001
1 ½	0.0938	½	48	–	✓	0.34	1160	1160 038 238 0001
1 ½	0.1250	½	48	–	✓	0.34	1160	1160 038 317 0001
1 ¾	0.0100	½	112	–	–	0.46	1160	1160 044 025 0001
1 ¾	0.0120	½	112	–	–	0.46	1160	1160 044 030 0001
1 ¾	0.0140	½	112	–	–	0.46	1160	1160 044 035 0001
1 ¾	0.0156	½	112	–	–	0.46	1160	1160 044 039 0001
1 ¾	0.0180	½	88	–	–	0.46	1160	1160 044 045 0001
1 ¾	0.0200	½	88	–	–	0.46	1160	1160 044 050 0001
1 ¾	0.0250	½	88	–	✓	0.46	1160	1160 044 063 0001
1 ¾	0.0313	½	88	–	✓	0.46	1160	1160 044 079 0001
1 ¾	0.0400	½	88	–	✓	0.46	1160	1160 044 101 0001
1 ¾	0.0469	½	56	–	✓	0.46	1160	1160 044 119 0001
1 ¾	0.0625	½	56	–	✓	0.46	1160	1160 044 158 0001
1 ¾	0.0781	½	56	–	✓	0.46	1160	1160 044 198 0001
1 ¾	0.0938	½	56	–	✓	0.46	1160	1160 044 238 0001
1 ¾	0.1250	½	56	–	✓	0.46	1160	1160 044 317 0001
2	0.0100	⅝	128	–	–	0.46	1160	1160 050 025 0001
2	0.0120	⅝	128	–	–	0.46	1160	1160 050 030 0001
2	0.0140	⅝	128	–	–	0.46	1160	1160 050 035 0001
2	0.0156	⅝	128	–	–	0.46	1160	1160 050 039 0001
2	0.0180	⅝	100	–	–	0.46	1160	1160 050 045 0001
2	0.0200	⅝	100	–	–	0.46	1160	1160 050 050 0001
2	0.0250	⅝	100	–	✓	0.46	1160	1160 050 063 0001
2	0.0313	⅝	100	–	✓	0.46	1160	1160 050 079 0001
2	0.0400	⅝	100	–	✓	0.46	1160	1160 050 101 0001
2	0.0469	⅝	64	–	✓	0.46	1160	1160 050 119 0001
2	0.0625	⅝	64	–	✓	0.46	1160	1160 050 158 0001
2	0.0781	⅝	64	–	✓	0.46	1160	1160 050 198 0001
2	0.0938	⅝	64	–	✓	0.46	1160	1160 050 238 0001
2	0.1250	⅝	64	–	✓	0.46	1160	1160 050 317 0001
2 ½	0.0100	⅝	160	–	–	0.71	1160	1160 063 025 0001
2 ½	0.0120	⅝	160	–	–	0.71	1160	1160 063 030 0001
2 ½	0.0140	⅝	160	–	–	0.71	1160	1160 063 035 0001
2 ½	0.0156	⅝	160	–	–	0.71	1160	1160 063 039 0001
2 ½	0.0180	⅝	160	–	–	0.71	1160	1160 063 045 0001
2 ½	0.0200	⅝	124	–	–	0.71	1160	1160 063 050 0001
2 ½	0.0250	⅝	124	–	✓	0.71	1160	1160 063 063 0001
2 ½	0.0313	⅝	124	–	✓	0.71	1160	1160 063 079 0001
2 ½	0.0400	⅝	124	–	✓	0.71	1160	1160 063 101 0001
2 ½	0.0469	⅝	124	–	✓	0.71	1160	1160 063 119 0001
2 ½	0.0625	⅝	80	–	✓	0.71	1160	1160 063 158 0001
2 ½	0.0781	⅝	80	–	✓	0.71	1160	1160 063 198 0001
2 ½	0.0938	⅝	80	–	✓	0.71	1160	1160 063 238 0001
2 ½	0.1250	⅝	80	–	✓	0.71	1160	1160 063 317 0001

Contd on next page / *Continúa en la página siguiente*

	d_1 (inch) outer-Ø / *Ø ext.*	ℓ_1 (inch) width/*ancho*	d_2 (inch) bore-Ø/ *Ø agujero*	**teeth** ***dientes***	**d3** (inch) hub-Ø / *isla hub*	**keyway**	a_e **max.** (inch)	**Cat.-No.**	**Item-No.**
inch Imperial Sizes / *Tamaños en pulgadas*	3	0.0120	1	150	–	–	0.71	1160	1160 076 030 0001
	3	0.0140	1	150	–	–	0.71	1160	1160 076 035 0001
	3	0.0156	1	150	–	–	0.71	1160	1160 076 039 0001
	3	0.0180	1	150	–	–	0.71	1160	1160 076 045 0001
	3	0.0200	1	150	–	–	0.71	1160	1160 076 050 0001
	3	0.0250	1	120	–	✓	0.71	1160	1160 076 063 0001
	3	0.0313	1	120	–	✓	0.71	1160	1160 076 079 0001
	3	0.0400	1	120	–	✓	0.71	1160	1160 076 101 0001
	3	0.0469	1	120	–	✓	0.71	1160	1160 076 119 0001
	3	0.0625	1	76	–	✓	0.71	1160	1160 076 158 0001
	3	0.0781	1	76	–	✓	0.71	1160	1160 076 198 0001
	3	0.0938	1	76	–	✓	0.71	1160	1160 076 238 0001
	3	0.1250	1	76	–	✓	0.71	1160	1160 076 317 0001
	4	0.0200	1	160	–	–	1.21	1160	1160 101 050 0001
	4	0.0250	1	160	–	✓	1.21	1160	1160 101 063 0001
	4	0.0313	1	160	–	✓	1.21	1160	1160 101 079 0001
	4	0.0400	1	128	–	✓	1.21	1160	1160 101 101 0001
	4	0.0469	1	128	–	✓	1.21	1160	1160 101 119 0001
	4	0.0625	1	128	–	✓	1.21	1160	1160 101 158 0001
	4	0.0781	1	80	–	✓	1.21	1160	1160 101 198 0001
	4	0.0938	1	80	–	✓	1.21	1160	1160 101 238 0001
	4	0.1250	1	80	–	✓	1.21	1160	1160 101 317 0001
	5	0.0313	1	160	–	✓	1.71	1160	1160 127 079 0001
	5	0.0400	1	160	–	✓	1.71	1160	1160 127 127 0001
	5	0.0469	1	160	–	✓	1.71	1160	1160 127 119 0001
	5	0.0625	1	126	–	✓	1.71	1160	1160 127 158 0001
	5	0.0781	1	126	–	✓	1.71	1160	1160 127 198 0001
	5	0.0938	1	100	–	✓	1.71	1160	1160 127 238 0001
	5	0.1250	1	100	–	✓	1.71	1160	1160 127 317 0001

Special tools on request. | *Herramientas especiales bajo pedido.*

for metric sizes / *para tamaños en mm*: Art. 1100 · p. 29-31

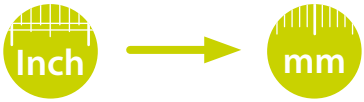

Circular Saw Blades

coarse pitch · SawCut B ECO

Sierras circulares

acabado grueso · SawCut B ECO

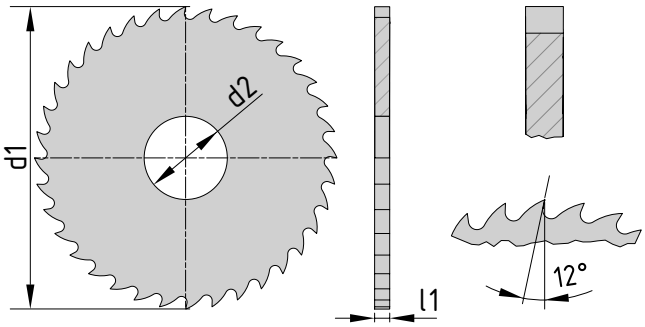

material/ *materiales*		optional modification/ *modificación opcional*	Tolerances / *tolerancias* (inch)		
			d₁	ℓ₁	d₂ – H7 ANSI
HSS ℓ₁ ≤ 0.025"	HSS-Co ℓ₁ ≥ 0.0313"	coatings and/or alternating chamfers / *revestimiento y / o chaflanes alternos*	1 ¾"- 4" ± .0039" 5" + .0039" – .0078"	± .0006"	⅜ - ⅝" + .0004" 1" + .0005"

APPLICATION:

For medium to deep slotting and cutoff operations in solid or thick-walled materials.

APLICACIÓN:

Para operaciones de ranurado y corte de profundidad media a profunda en materiales sólidos o de paredes finas.

	d₁ (inch) outer-Ø / *Ø ext.*	**ℓ₁** (inch) width/*ancho*	**d₂** (inch) bore-Ø/ *Ø agujero*	**teeth** ***dientes***	**d3** (inch) hub-Ø / *isla hub*	**keyway**	**a_e max.** (inch)	**Cat.-No.**	**Item-No.**
inch Imperial Sizes / *Tamaños en pulgadas*	1 ¾	0.0200	½	44	–	–	0.46	1260	1260 044 050 0001
	1 ¾	0.0250	½	44	–	✓	0.46	1260	1260 044 063 0001
	1 ¾	0.0313	½	44	–	✓	0.46	1260	1260 044 079 0001
	1 ¾	0.0400	½	44	–	✓	0.46	1260	1260 044 101 0001
	1 ¾	0.0469	½	34	–	✓	0.46	1260	1260 044 119 0001
	1 ¾	0.0625	½	34	–	✓	0.46	1260	1260 044 158 0001
	1 ¾	0.0781	½	34	–	✓	0.46	1260	1260 044 198 0001
	1 ¾	0.0938	½	34	–	✓	0.46	1260	1260 044 238 0001
	1 ¾	0.1250	½	34	–	✓	0.46	1260	1260 044 317 0001
	2	0.0200	⅝	50	–	–	0.46	1260	1260 050 050 0001
	2	0.0250	⅝	50	–	✓	0.46	1260	1260 050 063 0001
	2	0.0313	⅝	50	–	✓	0.46	1260	1260 050 079 0001
	2	0.0400	⅝	50	–	✓	0.46	1260	1260 050 101 0001
	2	0.0469	⅝	40	–	✓	0.46	1260	1260 050 119 0001
	2	0.0625	⅝	40	–	✓	0.46	1260	1260 050 158 0001
	2	0.0781	⅝	40	–	✓	0.46	1260	1260 050 198 0001
	2	0.0938	⅝	40	–	✓	0.46	1260	1260 050 238 0001
	2	0.1250	⅝	40	–	✓	0.46	1260	1260 050 317 0001

Contd on next page / *Continúa en la página siguiente*

	d_1 (inch) outer-Ø / *Ø ext.*	ℓ_1 (inch) width/*ancho*	d_2 (inch) bore-Ø/ *Ø agujero*	**teeth** ***dientes***	**d3** (inch) hub-Ø / *isla hub*	**keyway**	a_e **max.** (inch)	**Cat.-No.**	**Item-No.**
inch Imperial Sizes / *Tamaños en pulgadas*	2 ½	0.0200	⅝	50	–	–	0.71	1260	1260 063 050 0001
	2 ½	0.0250	⅝	50	–	✓	0.71	1260	1260 063 063 0001
	2 ½	0.0313	⅝	50	–	✓	0.71	1260	1260 063 079 0001
	2 ½	0.0400	⅝	50	–	✓	0.71	1260	1260 063 101 0001
	2 ½	0.0469	⅝	50	–	✓	0.71	1260	1260 063 119 0001
	2 ½	0.0625	⅝	40	–	✓	0.71	1260	1260 063 158 0001
	2 ½	0.0781	⅝	40	–	✓	0.71	1260	1260 063 198 0001
	2 ½	0.0938	⅝	40	–	✓	0.71	1260	1260 063 238 0001
	2 ½	0.1250	⅝	40	–	v	0.71	1260	1260 063 317 0001
	3	0.0200	1	60	–	–	0.71	1260	1260 076 050 0001
	3	0.0250	1	60	–	✓	0.71	1260	1260 076 063 0001
	3	0.0313	1	60	–	✓	0.71	1260	1260 076 079 0001
	3	0.0400	1	60	–	✓	0.71	1260	1260 076 101 0001
	3	0.0469	1	60	–	✓	0.71	1260	1260 076 119 0001
	3	0.0625	1	48	–	✓	0.71	1260	1260 076 158 0001
	3	0.0781	1	48	–	✓	0.71	1260	1260 076 198 0001
	3	0.0938	1	48	–	✓	0.71	1260	1260 076 238 0001
	3	0.1250	1	48	–	✓	0.71	1260	1260 076 317 0001
	4	0.0200	1	64	–	–	1.21	1260	1260 101 050 0001
	4	0.0250	1	64	–	✓	1.21	1260	1260 101 063 0001
	4	0.0313	1	64	–	✓	1.21	1260	1260 101 079 0001
	4	0.0400	1	64	–	✓	1.21	1260	1260 101 101 0001
	4	0.0469	1	64	–	✓	1.21	1260	1260 101 119 0001
	4	0.0625	1	64	–	✓	1.21	1260	1260 101 158 0001
	4	0.0781	1	50	–	✓	1.21	1260	1260 101 198 0001
	4	0.0938	1	50	–	✓	1.21	1260	1260 101 238 0001
	4	0.1250	1	50	–	✓	1.21	1260	1260 101 317 0001
	5	0.0313	1	80	–	✓	1.71	1260	1260 127 079 0001
	5	0.0400	1	80	–	✓	1.71	1260	1260 127 101 0001
	5	0.0469	1	80	–	✓	1.71	1260	1260 127 119 0001
	5	0.0625	1	64	–	✓	1.71	1260	1260 127 158 0001
	5	0.0781	1	64	–	✓	1.71	1260	1260 127 198 0001
	5	0.0938	1	50	–	✓	1.71	1260	1260 127 238 0001
	5	0.1250	1	50	–	✓	1.71	1260	1260 127 317 0001

Special tools on request. | *Herramientas especiales bajo pedido.*

for metric sizes / *para tamaños en mm*: Art. 1200 · p. 32-33

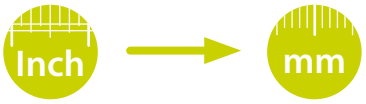

Straight Shank Saw Holder

general purpose

Mango portasierra circular

uso general

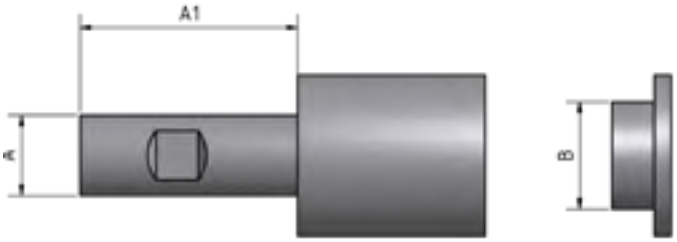

	B inch	A inch	A_1 inch	Cat.-No.	Item-No.
inch	0.2500	½	1.7031	6500	6500 006 043 0001
	0.3750	½	1.7031	6500	6500 009 046 0001
	0.5000	½	1.7031	6500	6500 012 052 0001
	0.6250	¾	2.0000	6500	6500 015 088 0001
	1.0000	¾	2.0000	6500	6500 025 095 0001

0.002" T.I.R. | *precisión 0.002"*

Fits to all standard saw blades:
1350, 1250, 1160, 1260

se adapta a todas las hojas de sierra estándar: 1350, 1250, 1160, 1260

Circular Saw Blades

fine pitch · SawCut A

Sierras circulares

acabado fino · SawCut A

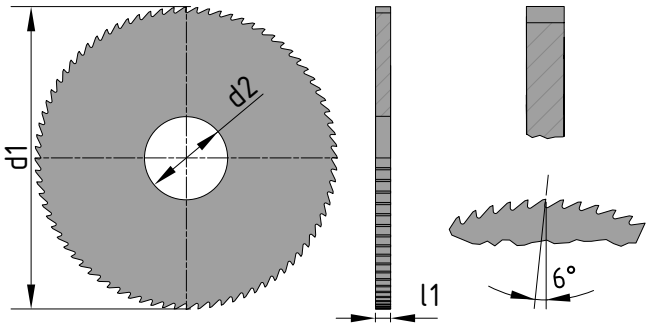

material/ *materiales*	standard/ *estándar*	toothing/ *dentado*	optional modification/ *modificación opcional*	Tolerances / *tolerancias* (mm)		
				d_1	ℓ_1	d_2 – H6
Solid Carbide *metal duro*	sim. to/ *análogo* DIN 1837	DIN 1840AN	coatings / *revestimiento*	20-125 ± 0,1000 160 + 0,1000 – 0,2000	± 0,0150	5 + 0,0080 8-10 + 0,0090 13-16 + 0,0110 22 + 0,0130 32 + 0,0160

APPLICATION:

For shallow to medium slotting and cutoff operations in solid or thin-walled materials.
Ideal for abrasive and high-tensile materials.

APLICACIÓN:

Para operaciones de ranurado y corte de poca profundidad a media en materiales sólidos o de paredes finas.
Ideales para materiales abrasivos y de gran resistencia.

	d_1 (mm) outer-Ø / *Ø ext.*	ℓ_1 (mm) width/*ancho*	d_2 (mm) bore-Ø/ *Ø agujero*	**teeth** ***dientes***	d3 (mm) hub-Ø / *isla hub*	a_e max. (mm)	Cat.-No.	Item-No.
mm Metric Sizes / *tamaños métricos*	20	0,2	5	40	–	3,5	5110	5110 020 020 0001
	20	0,25	5	40	–	3,5	5110	5110 020 025 0001
	20	0,3	5	40	–	3,5	5110	5110 020 030 0001
	20	0,4	5	40	–	3,5	5110	5110 020 040 0001
	20	0,5	5	40	–	3,5	5110	5110 020 050 0001
	20	0,6	5	40	–	3,5	5110	5110 020 060 0001
	20	0,8	5	40	–	3,5	5110	5110 020 080 0001
	20	1,0	5	40	–	3,5	5110	5110 020 100 0001
	20	1,2	5	40	–	3,5	5110	5110 020 120 0001
	20	1,6	5	40	–	3,5	5110	5110 020 160 0001
	20	2,0	5	40	–	3,5	5110	5110 020 200 0001
	25	0,2	8	50	–	5	5110	5110 025 020 0001
	25	0,25	8	50	–	5	5110	5110 025 025 0001
	25	0,3	8	50	–	5	5110	5110 025 030 0001
	25	0,4	8	50	–	5	5110	5110 025 040 0001
	25	0,5	8	50	–	5	5110	5110 025 050 0001
	25	0,6	8	50	–	5	5110	5110 025 060 0001
	25	0,8	8	50	–	5	5110	5110 025 080 0001
	25	1,0	8	50	–	5	5110	5110 025 100 0001
	25	1,2	8	50	–	5	5110	5110 025 120 0001
	25	1,6	8	50	–	5	5110	5110 025 160 0001
	25	2,0	8	50	–	5	5110	5110 025 200 0001
	32	0,25	8	62	–	7,5	5110	5110 032 025 0001
	32	0,3	8	62	–	7,5	5110	5110 032 030 0001
	32	0,4	8	62	–	7,5	5110	5110 032 040 0001
	32	0,5	8	62	–	7,5	5110	5110 032 050 0001
	32	0,6	8	62	–	7,5	5110	5110 032 060 0001
	32	0,8	8	62	–	7,5	5110	5110 032 080 0001
	32	1,0	8	62	–	7,5	5110	5110 032 100 0001
	32	1,2	8	62	–	7,5	5110	5110 032 120 0001
	32	1,6	8	62	–	7,5	5110	5110 032 160 0001
	32	2,0	8	62	–	7,5	5110	5110 032 200 0001
	32	2,5	8	62	–	7,5	5110	5110 032 250 0001

Contd on next page / *Continúa en la página siguiente*

mm Metric Sizes / *tamaños métricos*

d_1 (mm) outer-Ø / *Ø ext.*	ℓ_1 (mm) width/*ancho*	d_2 (mm) bore-Ø/ *Ø agujero*	teeth *dientes*	d3 (mm) hub-Ø / *isla hub*	a_e max. (mm)	Cat.-No.	Item-No.
40	0,25	10	78	–	9,5	5110	5110 040 025 0001
40	0,3	10	78	–	9,5	5110	5110 040 030 0001
40	0,4	10	78	–	9,5	5110	5110 040 040 0001
40	0,5	10	78	–	9,5	5110	5110 040 050 0001
40	0,6	10	78	–	9,5	5110	5110 040 060 0001
40	0,8	10	78	–	9,5	5110	5110 040 080 0001
40	1,0	10	78	–	9,5	5110	5110 040 100 0001
40	1,2	10	78	–	9,5	5110	5110 040 120 0001
40	1,6	10	78	–	9,5	5110	5110 040 160 0001
40	2,0	10	78	–	9,5	5110	5110 040 200 0001
40	2,5	10	78	–	9,5	5110	5110 040 250 0001
40	3,0	10	78	–	9,5	5110	5110 040 300 0001
50	0,25	13	80	–	11	5110	5110 050 025 0001
50	0,3	13	80	–	11	5110	5110 050 030 0001
50	0,4	13	80	–	11	5110	5110 050 040 0001
50	0,5	13	80	–	11	5110	5110 050 050 0001
50	0,6	13	80	–	11	5110	5110 050 060 0001
50	0,8	13	80	–	11	5110	5110 050 080 0001
50	1,0	13	80	–	11	5110	5110 050 100 0001
50	1,2	13	80	–	11	5110	5110 050 120 0001
50	1,6	13	80	–	11	5110	5110 050 160 0001
50	2,0	13	80	–	11	5110	5110 050 200 0001
50	2,5	13	80	–	11	5110	5110 050 250 0001
50	3,0	13	80	–	11	5110	5110 050 300 0001
63	0,25	16	80	–	14	5110	5110 063 025 0001
63	0,3	16	80	–	14	5110	5110 063 030 0001
63	0,4	16	80	–	14	5110	5110 063 040 0001
63	0,5	16	80	–	14	5110	5110 063 050 0001
63	0,6	16	80	–	14	5110	5110 063 060 0001
63	0,8	16	80	–	14	5110	5110 063 080 0001
63	1,0	16	80	–	14	5110	5110 063 100 0001
63	1,2	16	80	–	14	5110	5110 063 120 0001
63	1,6	16	80	–	14	5110	5110 063 160 0001
63	2,0	16	80	–	14	5110	5110 063 200 0001
63	2,5	16	80	–	14	5110	5110 063 250 0001
63	3,0	16	80	–	14	5110	5110 063 300 0001
80	0,3	22	100	–	20,5	5110	5110 080 030 0001
80	0,4	22	100	–	20,5	5110	5110 080 040 0001
80	0,5	22	100	–	20,5	5110	5110 080 050 0001
80	0,6	22	100	–	20,5	5110	5110 080 060 0001
80	0,8	22	100	–	20,5	5110	5110 080 080 0001
80	1,0	22	100	–	20,5	5110	5110 080 100 0001
80	1,2	22	100	–	20,5	5110	5110 080 120 0001
80	1,6	22	100	–	20,5	5110	5110 080 160 0001
80	2,0	22	100	–	20,5	5110	5110 080 200 0001
80	2,5	22	100	–	20,5	5110	5110 080 250 0001
80	3,0	22	100	–	20,5	5110	5110 080 300 0001
100	0,4	22	126	–	28,5	5110	5110 100 040 0001
100	0,5	22	126	–	28,5	5110	5110 100 050 0001
100	0,6	22	126	–	28,5	5110	5110 100 060 0001
100	0,8	22	126	–	28,5	5110	5110 100 080 0001
100	1,0	22	126	–	28,5	5110	5110 100 100 0001
100	1,2	22	126	–	28,5	5110	5110 100 120 0001
100	1,6	22	126	–	28,5	5110	5110 100 160 0001
100	2,0	22	126	–	28,5	5110	5110 100 200 0001
100	2,5	22	126	–	28,5	5110	5110 100 250 0001
100	3,0	22	126	–	28,5	5110	5110 100 300 0001

Contd on next page / *Continúa en la página siguiente*

	d_1 (mm) outer-Ø / *Ø ext.*	ℓ_1 (mm) width/*ancho*	d_2 (mm) bore-Ø/ *Ø agujero*	**teeth** ***dientes***	**d3** (mm) hub-Ø / *isla hub*	a_e **max.** (mm)	**Cat.-No.**	**Item-No.**
mm Metric Sizes / *tamaños métricos*	125	0,6	22	124	–	41	5110	5110 125 060 0001
	125	0,8	22	124	–	41	5110	5110 125 080 0001
	125	1,0	22	124	–	41	5110	5110 125 100 0001
	125	1,2	22	124	–	41	5110	5110 125 120 0001
	125	1,6	22	124	–	41	5110	5110 125 160 0001
	125	2,0	22	124	–	41	5110	5110 125 200 0001
	125	2,5	22	124	–	41	5110	5110 125 250 0001
	125	3,0	22	124	–	41	5110	5110 125 300 0001
	160	1,0	32	160	–	47	5110	5110 160 100 0001
	160	1,2	32	160	–	47	5110	5110 160 120 0001
	160	1,6	32	160	–	47	5110	5110 160 160 0001
	160	2,0	32	160	–	47	5110	5110 160 200 0001
	160	2,5	32	160	–	47	5110	5110 160 250 0001
	160	3,0	32	160	–	47	5110	5110 160 300 0001

Special tools on request. | *Herramientas especiales bajo pedido.*

for imperial sizes / *para tamaños en pulgadas*: Art. 1350 · p. 10-12

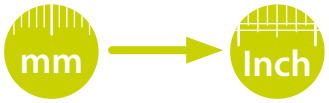

Circular Saw Blades

coarse pitch · SawCut B

Sierras circulares

acabado grueso · SawCut B

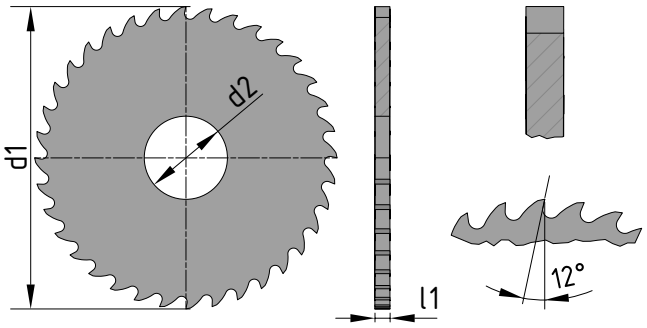

material/ *materiales*	standard/ *estándar*	toothing/ *dentado*	optional modification/ *modificación opcional*	Tolerances / *tolerancias* (mm)		
				d_1	ℓ_1	d_2 – H6
Solid Carbide *metal duro*	sim. to/ *análogo* DIN 1838	DIN 1840BN	coatings / *revestimiento*	20-125 ± 0,1000 160 + 0,1000 – 0,2000	± 0,0150	5 + 0,0080 8-10 + 0,0090 13-16 + 0,0110 22 + 0,0130 32 + 0,0160

APPLICATION:

For medium to deep slotting and cutoff operations in solid or thick-walled materials.
Ideal for abrasive and high-tensile materials.

APLICACIÓN:

Para operaciones de ranurado y corte de profundidad media a profunda en materiales sólidos o de paredes finas.
Ideales para materiales abrasivos y de gran resistencia.

mm Metric Sizes / *tamaños métricos*	d_1 (mm) outer-Ø / *Ø ext.*	ℓ_1 (mm) width/*ancho*	d_2 (mm) bore-Ø/ *Ø agujero*	teeth *dientes*	d3 (mm) hub-Ø / *isla hub*	a_e max. (mm)	Cat.-No.	Item-No.
	20	0,2	5	20	–	3,5	5120	5120 020 020 0001
	20	0,25	5	20	–	3,5	5120	5120 020 025 0001
	20	0,3	5	20	–	3,5	5120	5120 020 030 0001
	20	0,4	5	20	–	3,5	5120	5120 020 040 0001
	20	0,5	5	20	–	3,5	5120	5120 020 050 0001
	20	0,6	5	20	–	3,5	5120	5120 020 060 0001
	20	0,8	5	20	–	3,5	5120	5120 020 080 0001
	20	1,0	5	20	–	3,5	5120	5120 020 100 0001
	20	1,2	5	20	–	3,5	5120	5120 020 120 0001
	20	1,6	5	20	–	3,5	5120	5120 020 160 0001
	20	2,0	5	20	–	3,5	5120	5120 020 200 0001
	25	0,2	8	24	–	5	5120	5120 025 020 0001
	25	0,25	8	24	–	5	5120	5120 025 025 0001
	25	0,3	8	24	–	5	5120	5120 025 030 0001
	25	0,4	8	24	–	5	5120	5120 025 040 0001
	25	0,5	8	24	–	5	5120	5120 025 050 0001
	25	0,6	8	24	–	5	5120	5120 025 060 0001
	25	0,8	8	24	–	5	5120	5120 025 080 0001
	25	1,0	8	24	–	5	5120	5120 025 100 0001
	25	1,2	8	24	–	5	5120	5120 025 120 0001
	25	1,6	8	24	–	5	5120	5120 025 160 0001
	25	2,0	8	24	–	5	5120	5120 025 200 0001
	32	0,25	8	32	–	7,5	5120	5120 032 025 0001
	32	0,3	8	32	–	7,5	5120	5120 032 030 0001
	32	0,4	8	32	–	7,5	5120	5120 032 040 0001
	32	0,5	8	32	–	7,5	5120	5120 032 050 0001
	32	0,6	8	32	–	7,5	5120	5120 032 060 0001
	32	0,8	8	32	–	7,5	5120	5120 032 080 0001
	32	1,0	8	32	–	7,5	5120	5120 032 100 0001
	32	1,2	8	32	–	7,5	5120	5120 032 120 0001
	32	1,6	8	32	–	7,5	5120	5120 032 160 0001
	32	2,0	8	32	–	7,5	5120	5120 032 200 0001
	32	2,5	8	32	–	7,5	5120	5120 032 250 0001

Contd on next page / *Continúa en la página siguiente*

d_1 (mm) outer-Ø / *Ø ext.*	ℓ_1 (mm) width/*ancho*	d_2 (mm) bore-Ø/ *Ø agujero*	**teeth** ***dientes***	**d3** (mm) hub-Ø / *isla hub*	a_e **max.** (mm)	**Cat.-No.**	**Item-No.**
40	0,25	10	40	–	9,5	5120	5120 040 025 0001
40	0,3	10	40	–	9,5	5120	5120 040 030 0001
40	0,4	10	40	–	9,5	5120	5120 040 040 0001
40	0,5	10	40	–	9,5	5120	5120 040 050 0001
40	0,6	10	40	–	9,5	5120	5120 040 060 0001
40	0,8	10	40	–	9,5	5120	5120 040 080 0001
40	1,0	10	40	–	9,5	5120	5120 040 100 0001
40	1,2	10	40	–	9,5	5120	5120 040 120 0001
40	1,6	10	40	–	9,5	5120	5120 040 160 0001
40	2,0	10	40	–	9,5	5120	5120 040 200 0001
40	2,5	10	40	–	9,5	5120	5120 040 250 0001
40	3,0	10	40	–	9,5	5120	5120 040 300 0001
50	0,25	13	40	–	11	5120	5120 050 025 0001
50	0,3	13	40	–	11	5120	5120 050 030 0001
50	0,4	13	40	–	11	5120	5120 050 040 0001
50	0,5	13	40	–	11	5120	5120 050 050 0001
50	0,6	13	40	–	11	5120	5120 050 060 0001
50	0,8	13	40	–	11	5120	5120 050 080 0001
50	1,0	13	40	–	11	5120	5120 050 100 0001
50	1,2	13	40	–	11	5120	5120 050 120 0001
50	1,6	13	40	–	11	5120	5120 050 160 0001
50	2,0	13	40	–	11	5120	5120 050 200 0001
50	2,5	13	40	–	11	5120	5120 050 250 0001
50	3,0	13	40	–	11	5120	5120 050 300 0001
63	0,25	16	40	–	14	5120	5120 063 025 0001
63	0,3	16	40	–	14	5120	5120 063 030 0001
63	0,4	16	40	–	14	5120	5120 063 040 0001
63	0,5	16	40	–	14	5120	5120 063 050 0001
63	0,6	16	40	–	14	5120	5120 063 060 0001
63	0,8	16	40	–	14	5120	5120 063 080 0001
63	1,0	16	40	–	14	5120	5120 063 100 0001
63	1,2	16	40	–	14	5120	5120 063 120 0001
63	1,6	16	40	–	14	5120	5120 063 160 0001
63	2,0	16	40	–	14	5120	5120 063 200 0001
63	2,5	16	40	–	14	5120	5120 063 250 0001
63	3,0	16	40	–	14	5120	5120 063 300 0001
80	0,3	22	50	–	20,5	5120	5120 080 030 0001
80	0,4	22	50	–	20,5	5120	5120 080 040 0001
80	0,5	22	50	–	20,5	5120	5120 080 050 0001
80	0,6	22	50	–	20,5	5120	5120 080 060 0001
80	0,8	22	50	–	20,5	5120	5120 080 080 0001
80	1,0	22	50	–	20,5	5120	5120 080 100 0001
80	1,2	22	50	–	20,5	5120	5120 080 120 0001
80	1,6	22	50	–	20,5	5120	5120 080 160 0001
80	2,0	22	50	–	20,5	5120	5120 080 200 0001
80	2,5	22	50	–	20,5	5120	5120 080 250 0001
80	3,0	22	50	–	20,5	5120	5120 080 300 0001
100	0,4	22	62	–	28,5	5120	5120 100 040 0001
100	0,5	22	62	–	28,5	5120	5120 100 050 0001
100	0,6	22	62	–	28,5	5120	5120 100 060 0001
100	0,8	22	62	–	28,5	5120	5120 100 080 0001
100	1,0	22	62	–	28,5	5120	5120 100 100 0001
100	1,2	22	62	–	28,5	5120	5120 100 120 0001
100	1,6	22	62	–	28,5	5120	5120 100 160 0001
100	2,0	22	62	–	28,5	5120	5120 100 200 0001
100	2,5	22	62	–	28,5	5120	5120 100 250 0001
100	3,0	22	62	–	28,5	5120	5120 100 300 0001

mm Metric Sizes / *tamaños métricos*

Contd on next page / *Continúa en la página siguiente*

	d_1 (mm) outer-Ø / *Ø ext.*	ℓ_1 (mm) width/*ancho*	d_2 (mm) bore-Ø/ *Ø agujero*	**teeth** ***dientes***	**d3** (mm) hub-Ø / *isla hub*	a_e **max.** (mm)	**Cat.-No.**	**Item-No.**
mm Metric Sizes / *tamaños métricos*	125	0,6	22	78	–	41	5120	5120 125 060 0001
	125	0,8	22	78	–	41	5120	5120 125 080 0001
	125	1,0	22	78	–	41	5120	5120 125 100 0001
	125	1,2	22	78	–	41	5120	5120 125 120 0001
	125	1,6	22	78	–	41	5120	5120 125 160 0001
	125	2,0	22	78	–	41	5120	5120 125 200 0001
	125	2,5	22	78	–	41	5120	5120 125 250 0001
	125	3,0	22	78	–	41	5120	5120 125 300 0001
	160	1,0	32	80	–	47	5120	5120 160 100 0001
	160	1,2	32	80	–	47	5120	5120 160 120 0001
	160	1,6	32	80	–	47	5120	5120 160 160 0001
	160	2,0	32	80	–	47	5120	5120 160 200 0001
	160	2,5	32	80	–	47	5120	5120 160 250 0001
	160	3,0	32	80	–	47	5120	5120 160 300 0001

Special tools on request. | *Herramientas especiales bajo pedido.*

for imperial sizes / *para tamaños en pulgadas*: Art. 1250 · p. 13-15

Circular Saw Blades

i. a. for Rhobi-, Bimax-, Pressta-Eisele-Machines

Sierras circulares

para Rhobi-, Bimax-, Pressta-Eisele-Máquinas

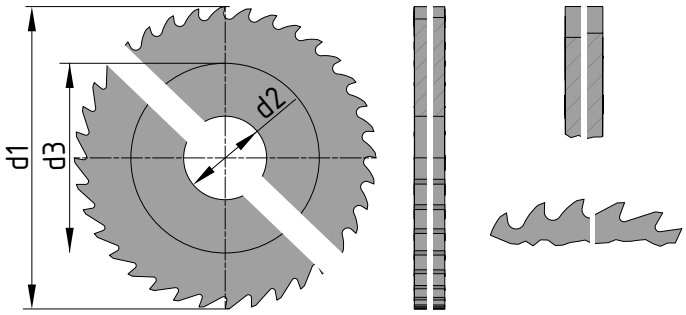

material/ *materiales*	standard/ *estándar*	toothing/ *dentado*	optional modification/ *modificación opcional*	Tolerances / *tolerancias* (mm)			
				d_1	ℓ_1	d_2 – H6	
Solid Carbide *metal duro*	GN-STANDARD ESTÁNDAR GN	customized/ *personalizad*	coatings / *revestimiento*	100-125 ± 0,1000 180-200 + 0,1000 – 0,2000	± 0,0150	22	+ 0,0130

APPLICATION:

For special use on Rohbi-, Bimax-, Pressta-Eisele- and other machines in abrasive and high-tensile materials.

APLICACIÓN:

Para uso especial en máquinas de Rohbi, Bimax, Pressta-Eisele y otras máquinas en materiales abrasivos y de gran resistencia.

TOOTHING:

Toothing according to customers demand.
For toothing one additional week delivery time.

DENTADO:

Dentado según los requisitos del cliente. Para el dentado el tiempo de entrega se prolonga en una semana.

The saws are polished and have an axial runout tolerance ≤ 0,05 mm.

Las sierras están pulidas y poseen una tolerancia de salto axial ≤ 0,05 mm.

	d_1 (mm) outer-Ø / *Ø ext.*	ℓ_1 (mm) width/*ancho*	d_2 (mm) bore-Ø/ *Ø agujero*	teeth *dientes*	d3 (mm) hub-Ø / *isla hub*	a_e max. (mm)	Cat.-No.	Item-No.
mm	100	0,5	22	Toothing according to customers demand	44	26,5	5130	5130 100 050 0001
	125	0,8	22		44	39	5130	5130 125 080 0001
	160	1,0	22		44	56,5	5130	5130 160 100 0001
	160	1,2	22	*Dentado según los requisitos del cliente*	44	56,5	5130	5130 160 120 0001
	180	1,2	22		44	66,5	5130	5130 180 120 0001
	200	1,2	22		44	76,5	5130	5130 200 120 0001

Special tools on request. | *Herramientas especiales bajo pedido.*

Circular Saw Blades

fine pitch · SawCut A ECO

Sierras circulares

acabado fino · SawCut A ECO

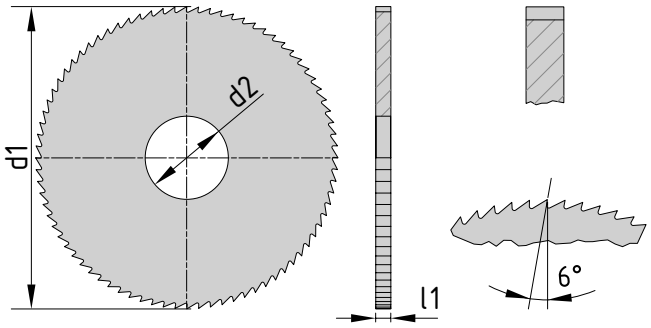

material/ *materiales*	standard/ *estándar*	toothing/ *dentado*	optional modification/ *modificación opcional*	Tolerances / *tolerancias* (mm)		
				d_1	ℓ_1	d_2 – H7
HSS ($\ell_1 \leq 2$ mm) HSS-Co ($\ell_1 > 2$ mm)	DIN 1837	DIN 1840AN	coatings and/or alternating chamfers / *revestimiento y / o chaflanes alternos*	20-125 ± 0,1000 160-200 + 0,1000 – 0,2000 250 + 0,1000 – 0,3000	± 0,0150	5 + 0,0120 8-10 + 0,0150 13-16 + 0,0180 22 + 0,0210 32 + 0,0250

APPLICATION:

For shallow to medium slotting and cutoff operations in solid or thin-walled materials.

APLICACIÓN:

Para operaciones de ranurado y corte de poca profundidad a media en materiales sólidos o de paredes finas.

	d_1 (mm) outer-Ø / *Ø ext.*	ℓ_1 (mm) width/*ancho*	d_2 (mm) bore-Ø/ *Ø agujero*	teeth *dientes*	d3 (mm) hub-Ø / *isla hub*	a_e max. (mm)	Cat.-No.	Item-No.
mm Metric Sizes / *tamaños métricos*	20	0,2	5	62	–	3,5	1100	1100 020 020 0001
	20	0,25	5	62	–	3,5	1100	1100 020 025 0001
	20	0,3	5	62	–	3,5	1100	1100 020 030 0001
	20	0,4	5	62	–	3,5	1100	1100 020 040 0001
	20	0,5	5	50	–	3,5	1100	1100 020 050 0001
	20	0,6	5	50	–	3,5	1100	1100 020 060 0001
	20	0,8	5	50	–	3,5	1100	1100 020 080 0001
	20	1,0	5	40	–	3,5	1100	1100 020 100 0001
	20	1,2	5	40	–	3,5	1100	1100 020 120 0001
	20	1,6	5	40	–	3,5	1100	1100 020 160 0001
	20	2,0	5	32	–	3,5	1100	1100 020 200 0001
	25	0,2	8	78	–	5	1100	1100 025 020 0001
	25	0,25	8	78	–	5	1100	1100 025 025 0001
	25	0,3	8	78	–	5	1100	1100 025 030 0001
	25	0,4	8	62	–	5	1100	1100 025 040 0001
	25	0,5	8	62	–	5	1100	1100 025 050 0001
	25	0,6	8	62	–	5	1100	1100 025 060 0001
	25	0,8	8	50	–	5	1100	1100 025 080 0001
	25	1,0	8	50	–	5	1100	1100 025 100 0001
	25	1,2	8	50	–	5	1100	1100 025 120 0001
	25	1,6	8	40	–	5	1100	1100 025 160 0001
	25	2,0	8	40	–	5	1100	1100 025 200 0001
	25	2,5	8	40	–	5	1100	1100 025 250 0001
	25	3,0	8	32	–	5	1100	1100 025 300 0001

Contd on next page / *Continúa en la página siguiente*

d_1 (mm) outer-Ø / *Ø ext.*	ℓ_1 (mm) width/*ancho*	d_2 (mm) bore-Ø/ *Ø agujero*	**teeth** ***dientes***	**d3** (mm) hub-Ø / *isla hub*	a_e **max.** (mm)	**Cat.-No.**	**Item-No.**
32	0,2	8	100	–	7,5	1100	1100 032 020 0001
32	0,25	8	100	–	7,5	1100	1100 032 025 0001
32	0,3	8	80	–	7,5	1100	1100 032 030 0001
32	0,4	8	80	–	7,5	1100	1100 032 040 0001
32	0,5	8	80	–	7,5	1100	1100 032 050 0001
32	0,6	8	62	–	7,5	1100	1100 032 060 0001
32	0,8	8	62	–	7,5	1100	1100 032 080 0001
32	1,0	8	62	–	7,5	1100	1100 032 100 0001
32	1,2	8	50	–	7,5	1100	1100 032 120 0001
32	1,6	8	50	–	7,5	1100	1100 032 160 0001
32	2,0	8	50	–	7,5	1100	1100 032 200 0001
32	2,5	8	40	–	7,5	1100	1100 032 250 0001
32	3,0	8	40	–	7,5	1100	1100 032 300 0001
32	4,0	8	40	–	7,5	1100	1100 032 400 0001
40	0,2	10	126	–	9,5	1100	1100 040 020 0001
40	0,25	10	100	–	9,5	1100	1100 040 025 0001
40	0,3	10	100	–	9,5	1100	1100 040 030 0001
40	0,4	10	100	–	9,5	1100	1100 040 040 0001
40	0,5	10	78	–	9,5	1100	1100 040 050 0001
40	0,6	10	78	–	9,5	1100	1100 040 060 0001
40	0,8	10	78	–	9,5	1100	1100 040 080 0001
40	1,0	10	62	–	9,5	1100	1100 040 100 0001
40	1,2	10	62	–	9,5	1100	1100 040 120 0001
40	1,6	10	62	–	9,5	1100	1100 040 160 0001
40	2,0	10	50	–	9,5	1100	1100 040 200 0001
40	2,5	10	50	–	9,5	1100	1100 040 250 0001
40	3,0	10	50	–	9,5	1100	1100 040 300 0001
40	4,0	10	40	–	9,5	1100	1100 040 400 0001
50	0,2	13	126	–	11	1100	1100 050 020 0001
50	0,25	13	126	–	11	1100	1100 050 025 0001
50	0,3	13	126	–	11	1100	1100 050 030 0001
50	0,4	13	98	–	11	1100	1100 050 040 0001
50	0,5	13	98	–	11	1100	1100 050 050 0001
50	0,6	13	98	–	11	1100	1100 050 060 0001
50	0,8	13	78	–	11	1100	1100 050 080 0001
50	1,0	13	78	–	11	1100	1100 050 100 0001
50	1,2	13	78	–	11	1100	1100 050 120 0001
50	1,6	13	62	–	11	1100	1100 050 160 0001
50	2,0	13	62	–	11	1100	1100 050 200 0001
50	2,5	13	62	–	11	1100	1100 050 250 0001
50	3,0	13	50	–	11	1100	1100 050 300 0001
50	4,0	13	50	–	11	1100	1100 050 400 0001
50	5,0	13	50	–	11	1100	1100 050 500 0001
63	0,25	16	158	–	14	1100	1100 063 025 0001
63	0,3	16	124	–	14	1100	1100 063 030 0001
63	0,4	16	124	–	14	1100	1100 063 040 0001
63	0,5	16	124	–	14	1100	1100 063 050 0001
63	0,6	16	98	–	14	1100	1100 063 060 0001
63	0,8	16	98	–	14	1100	1100 063 080 0001
63	1,0	16	98	–	14	1100	1100 063 100 0001
63	1,2	16	80	–	14	1100	1100 063 120 0001
63	1,6	16	80	–	14	1100	1100 063 160 0001
63	2,0	16	80	–	14	1100	1100 063 200 0001
63	2,5	16	62	–	14	1100	1100 063 250 0001
63	3,0	16	62	–	14	1100	1100 063 300 0001
63	4,0	16	62	–	14	1100	1100 063 400 0001
63	5,0	16	50	–	14	1100	1100 063 500 0001

mm Metric Sizes / *tamaños métricos*

Contd on next page / *Continúa en la página siguiente*

mm Metric Sizes / *tamaños métricos*

d_1 (mm) outer-Ø / *Ø ext.*	ℓ_1 (mm) width/*ancho*	d_2 (mm) bore-Ø/ *Ø agujero*	teeth *dientes*	d3 (mm) hub-Ø / *isla hub*	a_e max. (mm)	Cat.-No.	Item-No.
80	0,3	22	158	–	20,5	1100	1100 080 030 0001
80	0,4	22	158	–	20,5	1100	1100 080 040 0001
80	0,5	22	126	–	20,5	1100	1100 080 050 0001
80	0,6	22	126	–	20,5	1100	1100 080 060 0001
80	0,8	22	126	–	20,5	1100	1100 080 080 0001
80	1,0	22	100	–	20,5	1100	1100 080 100 0001
80	1,2	22	100	–	20,5	1100	1100 080 120 0001
80	1,6	22	100	–	20,5	1100	1100 080 160 0001
80	2,0	22	80	–	20,5	1100	1100 080 200 0001
80	2,5	22	80	–	20,5	1100	1100 080 250 0001
80	3,0	22	80	–	20,5	1100	1100 080 300 0001
80	4,0	22	62	–	20,5	1100	1100 080 400 0001
80	5,0	22	62	–	20,5	1100	1100 080 500 0001
100	0,5	22	158	–	28,5	1100	1100 100 050 0001
100	0,6	22	158	–	28,5	1100	1100 100 060 0001
100	0,8	22	126	–	28,5	1100	1100 100 080 0001
100	1,0	22	126	–	28,5	1100	1100 100 100 0001
100	1,2	22	126	–	28,5	1100	1100 100 120 0001
100	1,6	22	100	–	28,5	1100	1100 100 160 0001
100	2,0	22	100	–	28,5	1100	1100 100 200 0001
100	2,5	22	100	–	28,5	1100	1100 100 250 0001
100	3,0	22	78	–	28,5	1100	1100 100 300 0001
100	4,0	22	78	–	28,5	1100	1100 100 400 0001
100	5,0	22	78	–	28,5	1100	1100 100 500 0001
125	0,6	22	158	–	41	1100	1100 125 060 0001
125	0,8	22	158	–	41	1100	1100 125 080 0001
125	1,0	22	158	–	41	1100	1100 125 100 0001
125	1,2	22	124	–	41	1100	1100 125 120 0001
125	1,6	22	124	–	41	1100	1100 125 160 0001
125	2,0	22	124	–	41	1100	1100 125 200 0001
125	2,5	22	98	–	41	1100	1100 125 250 0001
125	3,0	22	98	–	41	1100	1100 125 300 0001
125	4,0	22	98	–	41	1100	1100 125 400 0001
125	5,0	22	78	–	41	1100	1100 125 500 0001
160	1,0	32	160	–	47	1100	1100 160 100 0001
160	1,2	32	160	–	47	1100	1100 160 120 0001
160	1,6	32	160	–	47	1100	1100 160 160 0001
160	2,0	32	126	–	47	1100	1100 160 200 0001
160	2,5	32	126	–	47	1100	1100 160 250 0001
160	3,0	32	126	–	47	1100	1100 160 300 0001
160	4,0	32	100	–	47	1100	1100 160 400 0001
200	1,0	32	200	63	67	1100	1100 200 100 0001
200	1,2	32	200	63	67	1100	1100 200 120 0001
200	1,6	32	158	63	67	1100	1100 200 160 0001
200	2,0	32	158	63	67	1100	1100 200 200 0001
200	2,5	32	158	63	67	1100	1100 200 250 0001
200	3,0	32	128	63	67	1100	1100 200 300 0001
250	1,6	32	196	63	92	1100	1100 250 160 0001
250	2,0	32	196	63	92	1100	1100 250 200 0001
250	2,5	32	158	63	92	1100	1100 250 250 0001
250	3,0	32	158	63	92	1100	1100 250 300 0001

Special tools on request. | *Herramientas especiales bajo pedido.*

for imperial sizes / *para tamaños en pulgadas*: Art. 1160 · p. 16-18

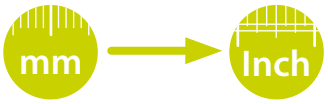

Circular Saw Blades

coarse pitch · SawCut B ECO

Sierras circulares

acabado grueso · SawCut B ECO

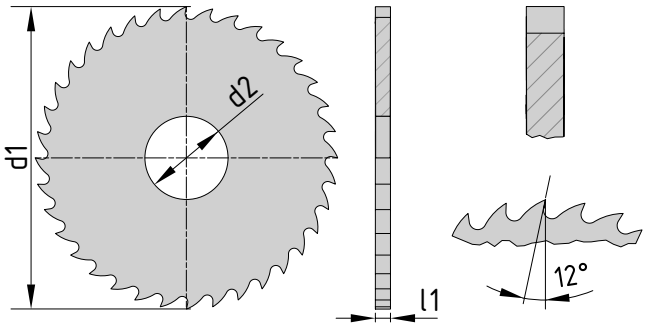

material/ *materiales*	standard/ *estándar*	toothing/ *dentado*	optional modification/ *modificación opcional*	Tolerances / *tolerancias* (mm)		
				d_1	ℓ_1	d_2 – H7
HSS ($\ell_1 \leq 2$ mm) HSS-Co ($\ell_1 > 2$ mm)	DIN 1838	DIN 1840BN	coatings and/or alternating chamfers / *revestimiento y / o chaflanes alternos*	50-125 ± 0,1000 160-200 + 0,1000 – 0,2000 250 + 0,1000 – 0,3000	± 0,0150	13-16 + 0,0180 22 + 0,0210 32 + 0,0250

APPLICATION:

For medium to deep slotting and cutoff operations in solid or thick-walled materials.

APLICACIÓN:

Para operaciones de ranurado y corte de profundidad media a profunda en materiales sólidos o de paredes finas.

	d_1 (mm) outer-Ø / *Ø ext.*	ℓ_1 (mm) width/*ancho*	d_2 (mm) bore-Ø/ *Ø agujero*	**teeth** ***dientes***	d3 (mm) hub-Ø /*isla hub*	a_e max. (mm)	Cat.-No.	Item-No.
mm Metric Sizes / *tamaños métricos*	50	0,5	13	50	–	11	1200	1200 050 050 0001
	50	0,6	13	50	–	11	1200	1200 050 060 0001
	50	0,8	13	40	–	11	1200	1200 050 080 0001
	50	1,0	13	40	–	11	1200	1200 050 100 0001
	50	1,2	13	40	–	11	1200	1200 050 120 0001
	50	1,6	13	32	–	11	1200	1200 050 160 0001
	50	2,0	13	32	–	11	1200	1200 050 200 0001
	50	2,5	13	32	–	11	1200	1200 050 250 0001
	50	3,0	13	24	–	11	1200	1200 050 300 0001
	50	4,0	13	24	–	11	1200	1200 050 400 0001
	50	5,0	13	24	–	11	1200	1200 050 500 0001
	63	0,5	16	62	–	14	1200	1200 063 050 0001
	63	0,6	16	50	–	14	1200	1200 063 060 0001
	63	0,8	16	50	–	14	1200	1200 063 080 0001
	63	1,0	16	50	–	14	1200	1200 063 100 0001
	63	1,2	16	40	–	14	1200	1200 063 120 0001
	63	1,6	16	40	–	14	1200	1200 063 160 0001
	63	2,0	16	40	–	14	1200	1200 063 200 0001
	63	2,5	16	32	–	14	1200	1200 063 250 0001
	63	3,0	16	32	–	14	1200	1200 063 300 0001
	63	4,0	16	32	–	14	1200	1200 063 400 0001
	63	5,0	16	24	–	14	1200	1200 063 500 0001

Contd on next page / *Continúa en la página siguiente*

mm Metric Sizes / *tamaños métricos*

d_1 (mm) outer-Ø / *Ø ext.*	ℓ_1 (mm) width/*ancho*	d_2 (mm) bore-Ø/ *Ø agujero*	teeth *dientes*	d3 (mm) hub-Ø /*isla hub*	a_e max. (mm)	Cat.-No.	Item-No.
80	0,5	22	62	–	20,5	1200	1200 080 050 0001
80	0,6	22	62	–	20,5	1200	1200 080 060 0001
80	0,8	22	62	–	20,5	1200	1200 080 080 0001
80	1,0	22	50	–	20,5	1200	1200 080 100 0001
80	1,2	22	50	–	20,5	1200	1200 080 120 0001
80	1,6	22	50	–	20,5	1200	1200 080 160 0001
80	2,0	22	40	–	20,5	1200	1200 080 200 0001
80	2,5	22	40	–	20,5	1200	1200 080 250 0001
80	3,0	22	40	–	20,5	1200	1200 080 300 0001
80	4,0	22	32	–	20,5	1200	1200 080 400 0001
80	5,0	22	32	–	20,5	1200	1200 080 500 0001
100	0,5	22	78	–	28,5	1200	1200 100 050 0001
100	0,6	22	78	–	28,5	1200	1200 100 060 0001
100	0,8	22	62	–	28,5	1200	1200 100 080 0001
100	1,0	22	62	–	28,5	1200	1200 100 100 0001
100	1,2	22	62	–	28,5	1200	1200 100 120 0001
100	1,6	22	50	–	28,5	1200	1200 100 160 0001
100	2,0	22	50	–	28,5	1200	1200 100 200 0001
100	2,5	22	50	–	28,5	1200	1200 100 250 0001
100	3,0	22	40	–	28,5	1200	1200 100 300 0001
100	4,0	22	40	–	28,5	1200	1200 100 400 0001
100	5,0	22	40	–	28,5	1200	1200 100 500 0001
125	0,6	22	78	–	41	1200	1200 125 060 0001
125	0,8	22	78	–	41	1200	1200 125 080 0001
125	1,0	22	78	–	41	1200	1200 125 100 0001
125	1,2	22	62	–	41	1200	1200 125 120 0001
125	1,6	22	62	–	41	1200	1200 125 160 0001
125	2,0	22	62	–	41	1200	1200 125 200 0001
125	2,5	22	50	–	41	1200	1200 125 250 0001
125	3,0	22	50	–	41	1200	1200 125 300 0001
125	4,0	22	50	–	41	1200	1200 125 400 0001
125	5,0	22	40	–	41	1200	1200 125 500 0001
160	1,0	32	80	–	47	1200	1200 160 100 0001
160	1,2	32	80	–	47	1200	1200 160 120 0001
160	1,6	32	80	–	47	1200	1200 160 160 0001
160	2,0	32	62	–	47	1200	1200 160 200 0001
160	2,5	32	62	–	47	1200	1200 160 250 0001
160	3,0	32	62	–	47	1200	1200 160 300 0001
160	4,0	32	50	–	47	1200	1200 160 400 0001
200	1,0	32	100	63	67	1200	1200 200 100 0001
200	1,2	32	100	63	67	1200	1200 200 120 0001
200	1,6	32	78	63	67	1200	1200 200 160 0001
200	2,0	32	78	63	67	1200	1200 200 200 0001
200	2,5	32	78	63	67	1200	1200 200 250 0001
200	3,0	32	62	63	67	1200	1200 200 300 0001
250	1,6	32	98	63	92	1200	1200 250 160 0001
250	2,0	32	98	63	92	1200	1200 250 200 0001
250	2,5	32	78	63	92	1200	1200 250 250 0001
250	3,0	32	78	63	92	1200	1200 250 300 0001

Special tools on request. | *Herramientas especiales bajo pedido.*

for imperial sizes / *para tamaños en pulgadas*: Art. 1260 · p. 19-20

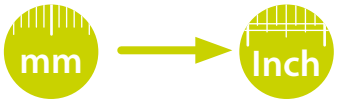

Circular Saw Blades

for Jewelry · SawCut A ECO

esp. fine pitch

Sierras circulares

para la joyería · SawCut A ECO

extra fino

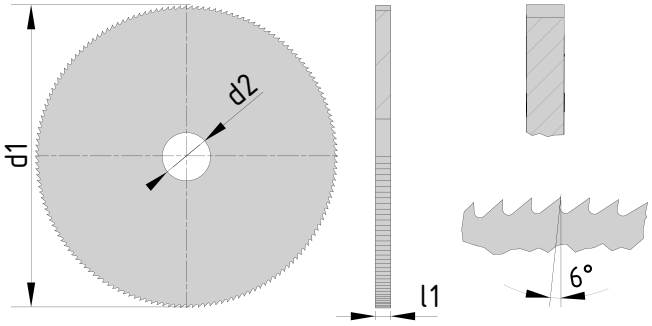

material/ *materiales*	standard/ *estándar*	toothing/ *dentado*	optional modification/ *modificación opcional*	Tolerances / *tolerancias* (mm)					
				d_1		ℓ_1	d_2 – H7		
HSS	GN-STANDARD ESTÁNDAR GN	DIN 1840AN	coatings / *revestimiento*	40-63	± 0,1000	± 0,0150	8	+ 0,0150	

APPLICATION:

For very shallow slotting and cutoff operations in thin-walled precious metals like gold and silver.

APLICACIÓN:

Para operaciones de ranurado y corte muy superficiales en metales preciosos de paredes finas como oro y plata.

	d_1 (mm) outer-Ø / *Ø ext.*	ℓ_1 (mm) width/*ancho*	d_2 (mm) bore-Ø/ *Ø agujero*	**teeth** ***dientes***	d3 (mm) hub-Ø / *isla hub*	a_e max. (mm)	Cat.-No.	Item-No.
mm Metric Sizes / *tamaños métricos*	40	0,2	8	126	–	9,5	1620	1620 040 020 0001
	40	0,25	8	126	–	9,5	1620	1620 040 025 0001
	40	0,3	8	126	–	9,5	1620	1620 040 030 0001
	40	0,4	8	126	–	9,5	1620	1620 040 040 0001
	40	0,5	8	126	–	9,5	1620	1620 040 050 0001
	40	0,6	8	126	–	9,5	1620	1620 040 060 0001
	50	0,2	8	158	–	11	1620	1620 050 020 0001
	50	0,25	8	158	–	11	1620	1620 050 025 0001
	50	0,3	8	158	–	11	1620	1620 050 030 0001
	50	0,4	8	158	–	11	1620	1620 050 040 0001
	50	0,5	8	158	–	11	1620	1620 050 050 0001
	50	0,6	8	158	–	11	1620	1620 050 060 0001
	63	0,2	8	198	–	14	1620	1620 063 020 0001
	63	0,25	8	198	–	14	1620	1620 063 025 0001
	63	0,3	8	198	–	14	1620	1620 063 030 0001
	63	0,4	8	198	–	14	1620	1620 063 040 0001
	63	0,5	8	198	–	14	1620	1620 063 050 0001
	63	0,6	8	198	–	14	1620	1620 063 060 0001
	63	0,8	8	198	–	14	1620	1620 063 080 0001
	63	1,0	8	198	–	14	1620	1620 063 100 0001

Special tools on request. | *Herramientas especiales bajo pedido.*

We rock specific operations

Recommendations for tool selection
Recomendaciones para la selección de herramientas

CUTTING TOOL MATERIAL

The given process conditions are the starting point of the side milling cutter selection and decisive for the choice of the cutting tool material. If **major vibrations** are to be expected **during the machining process,** such as on **unstable machining centers** or as a result of **unfavorable tool interfaces and workpiece clamping,** an **HSS-Co side milling cutter of type 2470/2410/2411 is the first choice.**

In case these can be excluded, a **solid carbide side milling cutter of type 5410** is the more economical alternative in terms of tool life and machining speed due to its **significantly higher hardness and temperature resistance.**

SIDE MILLING CUTTERS 2470/5410/2410/2411

Staggered toothed side milling cutters of type 5410, 2410 and 2411 are mainly suitable for **grooving and cutting operations with medium engagement lengths.** Their toothing is primarily designed for machining unalloyed and alloyed steels, as well as Cu alloys and AlSi alloys.

COATINGS

In order to maximize economic efficiency, **various coatings can be applied to our catalog cutting tools.** Please contact our application engineers, who will issue a **corresponding coating recommendation.**

MATERIAL DE LA HERRAMIENTA DE CORTE

Las condiciones del proceso dadas son el punto de inicio de la selección de las fresas de disco *y decisivas para elegir el material de la herramienta de corte. En caso de que se esperen* ***vibraciones importantes durante el proceso de mecanizado,*** *como en* ***centros de mecanizado inestables*** *o debido a* ***interfaces de la herramienta y sujeción de la pieza de trabajo desfavorables,*** *deberá optarse en primera instancia por una* ***fresa de disco de acero rápido aleado con cobalto (HSS-Co) del tipo 2470/2410/2411.***

De no ser posible, la alternativa más rentable será una ***fresa de disco de carburo sólido del tipo 5410*** *en cuanto a la vida útil de la herramienta y la velocidad de mecanizado gracias a su* ***dureza y resistencia a la temperatura considerablemente mayores.***

FRESAS DE DISCO 2470/5410/2410/2411

Las fresas de disco con dentado escalonado del tipo 5410, 2410 y 2411 resultan muy adecuadas para ***operaciones de ranurado y corte con longitudes medianas.*** *Su dentado se ha diseñado principalmente para aceros no aleados y aleados de mecanizado, así como aleaciones de Cu y aleaciones AlSi.*

REVESTIMIENTOS

Para maximizar la rentabilidad pueden aplicarse ***distintos revestimientos a nuestras herramientas de corte del catálogo.*** *Póngase en contacto con nuestros ingenieros de aplicación para que le envíen la* ***correspondiente recomendación de revestimiento.***

Side Milling Cutters
Fresas de disco

	product-type *tipo de producto*	material *materiales*	tooth pitch *inclinación del diente*	tooth form *forma del diente*	cat.-No. cat.-No	page página
inch	**Side Milling Cutters** ***Fresas de disco***	HSS-Co		staggered teeth *dentado escalonado*	**2470**	**38–39**
mm	**Side Milling Cutters** ***Fresas de disco***	Solid Carbide *metal duro*		staggered teeth *dentado escalonado*	**5410**	**40**
mm	**Side Milling Cutters** ***Fresas de disco***	HSS-Co		staggered teeth *dentado escalonado*	**2410**	**41-43**
mm	**Side Milling Cutters** ***Fresas de disco***	HSS-Co		staggered teeth *dentado escalonado*	**2411**	**41–43**

SPECIAL DIMENSIONS OR SPECIAL APPLICATIONS?

Talk to us. We are happy to manufacture **custom-made products for you in regard to tool dimensions, tooth geometries, interfaces, cutting materials and coatings.**
For **special inquiries** please contact us or use our **forms on www.controx.com** (link on page 46/47).

¿DIMENSIONES ESPECIALES O APLICACIONES ESPECIALES?

*Póngase en contacto con nosotros. Estaremos encantados de fabricar **productos personalizados para usted en cuanto a las dimensiones de la herramienta, las geometrías del dentado, las interfaces, los materiales de corte y los revestimientos.** Para **peticiones especiales** consúltenos o bien utilice nuestros **formularios en www.controx.com** (enlace en la página 46/47).*

Side Milling Cutters

staggered teeth

Fresas de disco

dentado escalonado

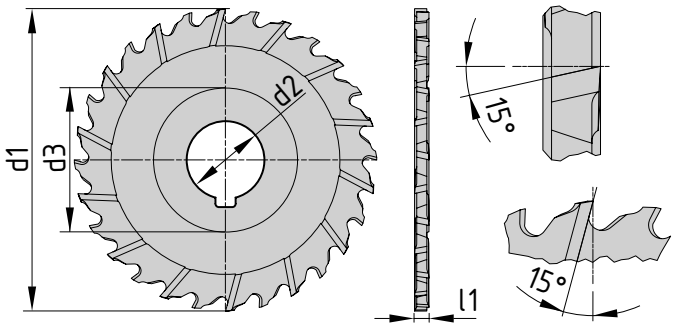

material/ *materiales*	optional modification/ *modificación opcional*	Tolerances / *tolerancias* (inch)		
		d_1	ℓ_1	d_2 – H7 ANSI
HSS-Co	coatings / *revestimiento*	2" ± .004" 2 ½"- 4" ± .006" 5" ± .008"	± .0012"	⅝" + .0007" ⅞"-1" + .0008"

APPLICATION:

For wide and deep slotting and plunging operations, where a fine surface finish on the side walls is required. The staggered tooth design enables chatter-free operations and high feed rates. Side Milling Cutters 1/4" and wider can be used for side milling.

For materials up to 1200 N/mm².

APLICACIÓN:

Para operaciones de ranurado e inmersión anchas y profundas en las que se precisa un acabado fino de la superficie en las paredes laterales. El diseño del dentado escalonado permite operaciones sin rebabas y altas velocidades de alimentación. Las fresas de disco de 1/4" y más anchas pueden utilizarse para el fresado lateral.

Para materiales hasta 1200 N/mm².

	d_1 (inch) outer-Ø / *Ø ext.*	ℓ_1 (inch) width/*ancho*	d_2 (inch) bore-Ø/ *Ø agujero*	teeth *dientes*	d3 (inch) hub-Ø / *isla hub*	a_e max. (inch)	Cat.-No.	Item-No.
inch Imperial Sizes / *Tamaños en pulgadas*	2	0.0625	⅝	22	1	0.45	2470	2470 050 015 0001
	2	0.0781	⅝	22	1	0.45	2470	2470 050 019 0001
	2	0.0938	⅝	22	1	0.45	2470	2470 050 023 0001
	2	0.1250	⅝	22	1	0.45	2470	2470 050 031 0001
	2	0.1563	⅝	22	1	0.45	2470	2470 050 039 0001
	2	0.1875	⅝	12	1	0.45	2470	2470 050 047 0001
	2	0.2188	⅝	12	1	0.45	2470	2470 050 055 0001
	2	0.2500	⅝	12	1	0.45	2470	2470 050 063 0001
	2 ½	0.0625	⅞	36	1 ¼	0.58	2470	2470 063 015 0001
	2 ½	0.0781	⅞	36	1 ¼	0.58	2470	2470 063 019 0001
	2 ½	0.0938	⅞	36	1 ¼	0.58	2470	2470 063 023 0001
	2 ½	0.1250	⅞	36	1 ¼	0.58	2470	2470 063 031 0001
	2 ½	0.1563	⅞	36	1 ¼	0.58	2470	2470 063 039 0001
	2 ½	0.1875	⅞	36	1 ¼	0.58	2470	2470 063 047 0001
	2 ½	0.2188	⅞	36	1 ¼	0.58	2470	2470 063 055 0001
	2 ½	0.2500	⅞	36	1 ¼	0.58	2470	2470 063 063 0001
	3	0.0625	1	32	1 ½	0.69	2470	2470 076 015 0001
	3	0.0781	1	32	1 ½	0.69	2470	2470 076 019 0001
	3	0.0938	1	32	1 ½	0.69	2470	2470 076 023 0001
	3	0.1250	1	32	1 ½	0.69	2470	2470 076 031 0001
	3	0.1563	1	32	1 ½	0.69	2470	2470 076 039 0001
	3	0.1875	1	32	1 ½	0.69	2470	2470 076 047 0001
	3	0.2188	1	32	1 ½	0.69	2470	2470 076 055 0001
	3	0.2500	1	32	1 ½	0.69	2470	2470 076 076 0001
	4	0.0625	1	36	1 ⅝	1.13	2470	2470 101 015 0001
	4	0.0781	1	36	1 ⅝	1.13	2470	2470 101 019 0001
	4	0.0938	1	36	1 ⅝	1.13	2470	2470 101 023 0001
	4	0.1250	1	36	1 ⅝	1.13	2470	2470 101 031 0001
	4	0.1563	1	36	1 ⅝	1.13	2470	2470 101 039 0001
	4	0.1875	1	36	1 ⅝	1.13	2470	2470 101 047 0001
	4	0.2188	1	36	1 ⅝	1.13	2470	2470 101 055 0001
	4	0.2500	1	36	1 ⅝	1.13	2470	2470 101 063 0001
	5	0.0625	1	40	1 ⅝	1.63	2470	2470 127 015 0001
	5	0.0781	1	40	1 ⅝	1.63	2470	2470 127 019 0001
	5	0.0938	1	40	1 ⅝	1.63	2470	2470 127 023 0001
	5	0.1250	1	40	1 ⅝	1.63	2470	2470 127 031 0001
	5	0.1563	1	40	1 ⅝	1.63	2470	2470 127 039 0001
	5	0.1875	1	40	1 ⅝	1.63	2470	2470 127 047 0001
	5	0.2188	1	40	1 ⅝	1.63	2470	2470 127 055 0001
	5	0.2500	1	40	1 ⅝	1.63	2470	2470 127 063 0001

Special tools on request. | *Herramientas especiales bajo pedido.*

for metric sizes / *para tamaños en mm*: Art. 2410/2411 · p. 41-43

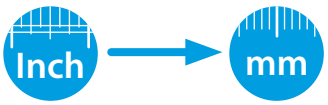

Side Milling Cutters

staggered teeth

Fresas de disco

dentado escalonado

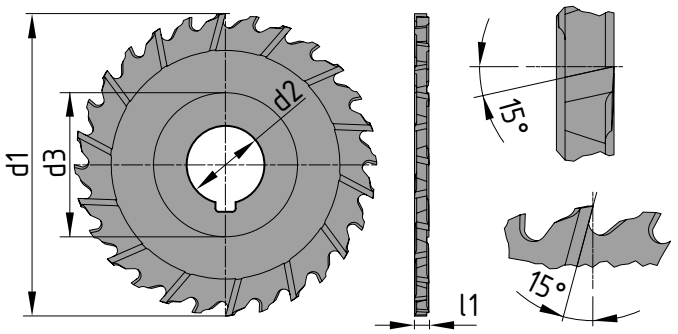

material/ *materiales*	standard/ *estándar*	optional modification/ *modificación opcional*	Tolerances / *tolerancias* (mm)					
			d_1 – js16		ℓ_1 – k11		d_2 – H7	
Solid Carbide *metal duro*	DIN 1834A	coatings / *revestimiento*	63-80 100 125	± 0,950 ± 1,100 ± 1,250	2,0-3,0 4,0-6,0	+ 0,0600 + 0,0750	22-27 32	+ 0,0210 + 0,0250

APPLICATION:

For wide and deep slotting and plunging operations, where a fine surface finish on the side walls is required. The staggered tooth design enables chatter-free operations and high feed rates.

For materials up to 1600 N/mm².

APLICACIÓN:

Para operaciones de ranurado e inmersión anchas y profundas en las que se precisa un acabado fino de la superficie en las paredes laterales. El diseño del dentado escalonado permite operaciones sin rebabas y altas velocidades de alimentación.
Para materiales hasta 1600 N/mm².

	d_1 (mm) outer-Ø / *Ø ext.*	ℓ_1 (mm) width/*ancho*	d_2 (mm) bore-Ø/ *Ø agujero*	teeth *dientes*	d3 (mm) hub-Ø / *isla hub*	a_e max. (mm)	Cat.-No.	Item-No.
mm Metric Sizes / *tamaños métricos*	63	2,0	22	28	34	13	5410	5410 063 020 0001
	63	2,5	22	28	34	13	5410	5410 063 025 0001
	63	3,0	22	28	34	13	5410	5410 063 030 0001
	63	4,0	22	28	34	13	5410	5410 063 040 0001
	63	5,0	22	28	34	13	5410	5410 063 050 0001
	63	6,0	22	28	34	13	5410	5410 063 060 0001
	80	2,0	27	32	42	17,5	5410	5410 080 020 0001
	80	2,5	27	32	42	17,5	5410	5410 080 025 0001
	80	3,0	27	32	42	17,5	5410	5410 080 030 0001
	80	4,0	27	32	42	17,5	5410	5410 080 040 0001
	80	5,0	27	32	42	17,5	5410	5410 080 050 0001
	80	6,0	27	32	42	17,5	5410	5410 080 060 0001
	100	2,0	32	36	48	24,5	5410	5410 100 020 0001
	100	2,5	32	36	48	24,5	5410	5410 100 025 0001
	100	3,0	32	36	48	24,5	5410	5410 100 030 0001
	100	4,0	32	36	48	24,5	5410	5410 100 040 0001
	100	5,0	32	36	48	24,5	5410	5410 100 050 0001
	100	6,0	32	36	48	24,5	5410	5410 100 060 0001
	125	2,0	32	40	48	37	5410	5410 125 020 0001
	125	2,5	32	40	48	37	5410	5410 125 025 0001
	125	3,0	32	40	48	37	5410	5410 125 030 0001
	125	4,0	32	40	48	37	5410	5410 125 040 0001
	125	5,0	32	40	48	37	5410	5410 125 050 0001
	125	6,0	32	40	48	37	5410	5410 125 060 0001

Special tools on request. | *Herramientas especiales bajo pedido.*

Side Milling Cutters

staggered teeth

DIN 1834 (2410) · GN-Standard (2411)

Fresa de disco

dentado escalonado

DIN 1834 (2410) · GN-Standard (2411)

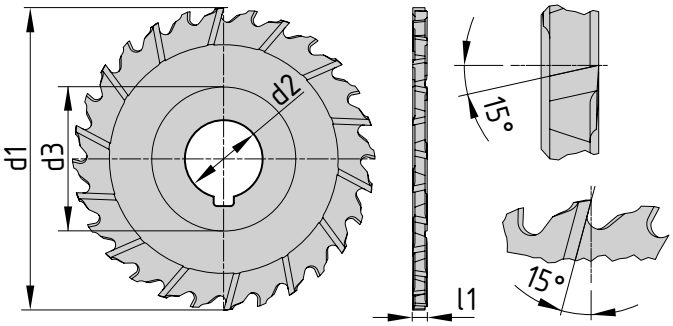

material/ *materiales*	standard/ *estándar*	standard/ *estándar*	optional modification/ *modificación opcional*	Tolerances / *tolerancias* (mm)					
				d_1 – js16		ℓ_1 – k11		d_2 – H7	
HSS-Co	DIN 1834A	sim. to/ *análogo* DIN 1834A	coatings / *revestimiento*	50	± 0,8000				
				63-80	± 0,9500	1,6-3	+ 0,0600	16	+ 0,0180
				100	± 1,1000	3,5-6	+ 0,0750	22-27	+ 0,0210
				125-160	± 1,2500	8-10	+ 0,0900	32-40	+ 0,0250
	2410	2411		200	± 1,4500				

APPLICATION:

For wide and deep slotting and plunging operations, where a fine surface finish on the side walls is required. The staggered tooth design enables chatter-free operations and high feed rates.

For materials up to 1200 N/mm².

APLICACIÓN:

Para operaciones de ranurado e inmersión anchas y profundas en las que se precisa un acabado fino de la superficie en las paredes laterales. El diseño del dentado escalonado permite operaciones sin rebabas y altas velocidades de alimentación.
Para materiales hasta 1200 N/mm².

	d_1 (mm) outer-Ø / *Ø ext.*	ℓ_1 (mm) width/*ancho*	d_2 (mm) bore-Ø/ *Ø agujero*	**teeth** ***dientes***	**d3** (mm) hub-Ø / *isla hub*	a_e **max.** (mm)	**Cat.-No.**	**Item-No.**
mm Metric Sizes / *tamaños métricos*	50	1,6	16	22	27	10	2410	2410 050 016 0001
	50	2,0	16	22	27	10	2410	2410 050 020 0001
	50	2,5	16	22	27	10	2410	2410 050 025 0001
	50	3,0	16	22	27	10	2410	2410 050 030 0001
	50	3,5	16	22	27	10	2410	2410 050 035 0001
	50	4,0	16	22	27	10	2410	2410 050 040 0001
	63	1,6	22	28	34	13	2410	2410 063 016 0001
	63	2,0	22	28	34	13	2410	2410 063 020 0001
	63	2,5	22	28	34	13	2410	2410 063 025 0001
	63	3,0	22	28	34	13	2410	2410 063 030 0001
	63	3,5	22	28	34	13	2410	2410 063 035 0001
	63	4,0	22	28	34	13	2410	2410 063 040 0001
	63	4,5	22	28	34	13	2410	2410 063 045 0001
	63	5,0	22	28	34	13	2410	2410 063 050 0001
	63	6,0	22	28	34	13	2410	2410 063 060 0001
	63	1,6	**16**	28	30	15	**2411**	2411 063 016 0001
	63	2,0	**16**	28	30	15	**2411**	2411 063 020 0001
	63	2,5	**16**	28	30	15	**2411**	2411 063 025 0001
	63	3,0	**16**	28	30	15	**2411**	2411 063 030 0001
	63	4,0	**16**	28	30	15	**2411**	2411 063 040 0001
	63	5,0	**16**	28	30	15	**2411**	2411 063 050 0001
	63	6,0	**16**	28	30	15	**2411**	2411 063 060 0001

Contd on next page / *Continúa en la página siguiente*

mm Metric Sizes / *tamaños métricos*

d_1 (mm) outer-Ø / *Ø ext.*	**ℓ_1** (mm) width/*ancho*	**d_2** (mm) bore-Ø/ *Ø agujero*	**teeth** ***dientes***	**d3** (mm) hub-Ø / *isla hub*	**a_e max.** (mm)	**Cat.-No.**	**Item-No.**
80	1,6	27	32	42	17,5	2410	2410 080 016 0001
80	2,0	27	32	42	17,5	2410	2410 080 020 0001
80	2,5	27	32	42	17,5	2410	2410 080 025 0001
80	3,0	27	32	42	17,5	2410	2410 080 030 0001
80	3,5	27	32	42	17,5	2410	2410 080 035 0001
80	4,0	27	32	42	17,5	2410	2410 080 040 0001
80	4,5	27	32	42	17,5	2410	2410 080 045 0001
80	5,0	27	32	42	17,5	2410	2410 080 050 0001
80	6,0	27	32	42	17,5	2410	2410 080 060 0001
80	1,6	**22**	32	36	20,5	**2411**	2411 080 016 0001
80	2,0	**22**	32	36	20,5	**2411**	2411 080 020 0001
80	2,5	**22**	32	36	20,5	**2411**	2411 080 025 0001
80	3,0	**22**	32	36	20,5	**2411**	2411 080 030 0001
80	4,0	**22**	32	36	20,5	**2411**	2411 080 040 0001
80	5,0	**22**	32	36	20,5	**2411**	2411 080 050 0001
80	6,0	**22**	32	36	20,5	**2411**	2411 080 060 0001
100	1,6	32	36	48	24,5	2410	2410 100 016 0001
100	2,0	32	36	48	24,5	2410	2410 100 020 0001
100	2,5	32	36	48	24,5	2410	2410 100 025 0001
100	3,0	32	36	48	24,5	2410	2410 100 030 0001
100	3,5	32	36	48	24,5	2410	2410 100 035 0001
100	4,0	32	36	48	24,5	2410	2410 100 040 0001
100	4,5	32	36	48	24,5	2410	2410 100 045 0001
100	5,0	32	36	48	24,5	2410	2410 100 050 0001
100	6,0	32	36	48	24,5	2410	2410 100 060 0001
100	8,0	32	36	48	24,5	2410	2410 100 080 0001
100	1,6	**22**	36	40	28,5	**2411**	2411 100 016 0001
100	2,0	**22**	36	40	28,5	**2411**	2411 100 020 0001
100	2,5	**22**	36	40	28,5	**2411**	2411 100 025 0001
100	3,0	**22**	36	40	28,5	**2411**	2411 100 030 0001
100	4,0	**22**	36	40	28,5	**2411**	2411 100 040 0001
100	5,0	**22**	36	40	28,5	**2411**	2411 100 050 0001
100	6,0	**22**	36	40	28,5	**2411**	2411 100 060 0001
125	1,6	32	40	48	37	2410	2410 125 016 0001
125	2,0	32	40	48	37	2410	2410 125 020 0001
125	2,5	32	40	48	37	2410	2410 125 025 0001
125	3,0	32	40	48	37	2410	2410 125 030 0001
125	3,5	32	40	48	37	2410	2410 125 035 0001
125	4,0	32	40	48	37	2410	2410 125 040 0001
125	4,5	32	40	48	37	2410	2410 125 045 0001
125	5,0	32	40	48	37	2410	2410 125 050 0001
125	6,0	32	40	48	37	2410	2410 125 060 0001
125	8,0	32	32	48	37	2410	2410 125 080 0001
125	10,0	32	32	48	37	2410	2410 125 100 0001
125	2,0	**22**	40	40	41	**2411**	2411 125 020 0001
125	2,5	**22**	40	40	41	**2411**	2411 125 025 0001
125	3,0	**22**	40	40	41	**2411**	2411 125 030 0001
125	4,0	**22**	40	40	41	**2411**	2411 125 040 0001
125	5,0	**22**	40	40	41	**2411**	2411 125 050 0001
125	6,0	**22**	40	40	41	**2411**	2411 125 060 0001

Contd on next page / *Continúa en la página siguiente*

	d_1 (mm) outer-Ø / *Ø ext.*	ℓ_1 (mm) width/*ancho*	d_2 (mm) bore-Ø/ *Ø agujero*	teeth *dientes*	d3 (mm) hub-Ø / *isla hub*	a_e max. (mm)	Cat.-No.	Item-No.
mm Metric Sizes / *tamaños métricos*	160	2,0	40	48	65	46	2410	2410 160 020 0001
	160	2,5	40	48	65	46	2410	2410 160 025 0001
	160	3,0	40	48	65	46	2410	2410 160 030 0001
	160	4,0	40	48	65	46	2410	2410 160 040 0001
	160	5,0	40	48	65	46	2410	2410 160 050 0001
	160	6,0	40	48	65	46	2410	2410 160 060 0001
	160	8,0	40	36	65	46	2410	2410 160 080 0001
	160	10,0	40	36	65	46	2410	2410 160 100 0001
	160	3,0	**32**	48	63	47	**2411**	2411 160 030 0001
	160	4,0	**32**	48	63	47	**2411**	2411 160 040 0001
	160	5,0	**32**	48	63	47	**2411**	2411 160 050 0001
	160	6,0	**32**	48	63	47	**2411**	2411 160 060 0001
	200	3,0	40	56	90	53,5	2410	2410 200 030 0001
	200	4,0	40	56	90	53,5	2410	2410 200 040 0001
	200	5,0	40	56	90	53,5	2410	2410 200 050 0001
	200	6,0	40	56	90	53,5	2410	2410 200 060 0001
	200	8,0	40	40	58	69,5	2410	2410 200 080 0001
	200	10,0	40	40	58	69,5	2410	2410 200 100 0001
	200	3,0	**32**	56	63	67	**2411**	2411 200 030 0001
	200	4,0	**32**	56	63	67	**2411**	2411 200 040 0001
	200	5,0	**32**	56	63	67	**2411**	2411 200 050 0001
	200	6,0	**32**	56	63	67	**2411**	2411 200 060 0001

Special tools on request. | *Herramientas especiales bajo pedido.*

for imperial sizes / *para tamaños en pulgadas*: Art. 2470 · p. 38-39

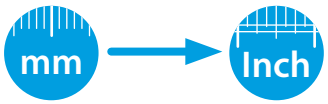

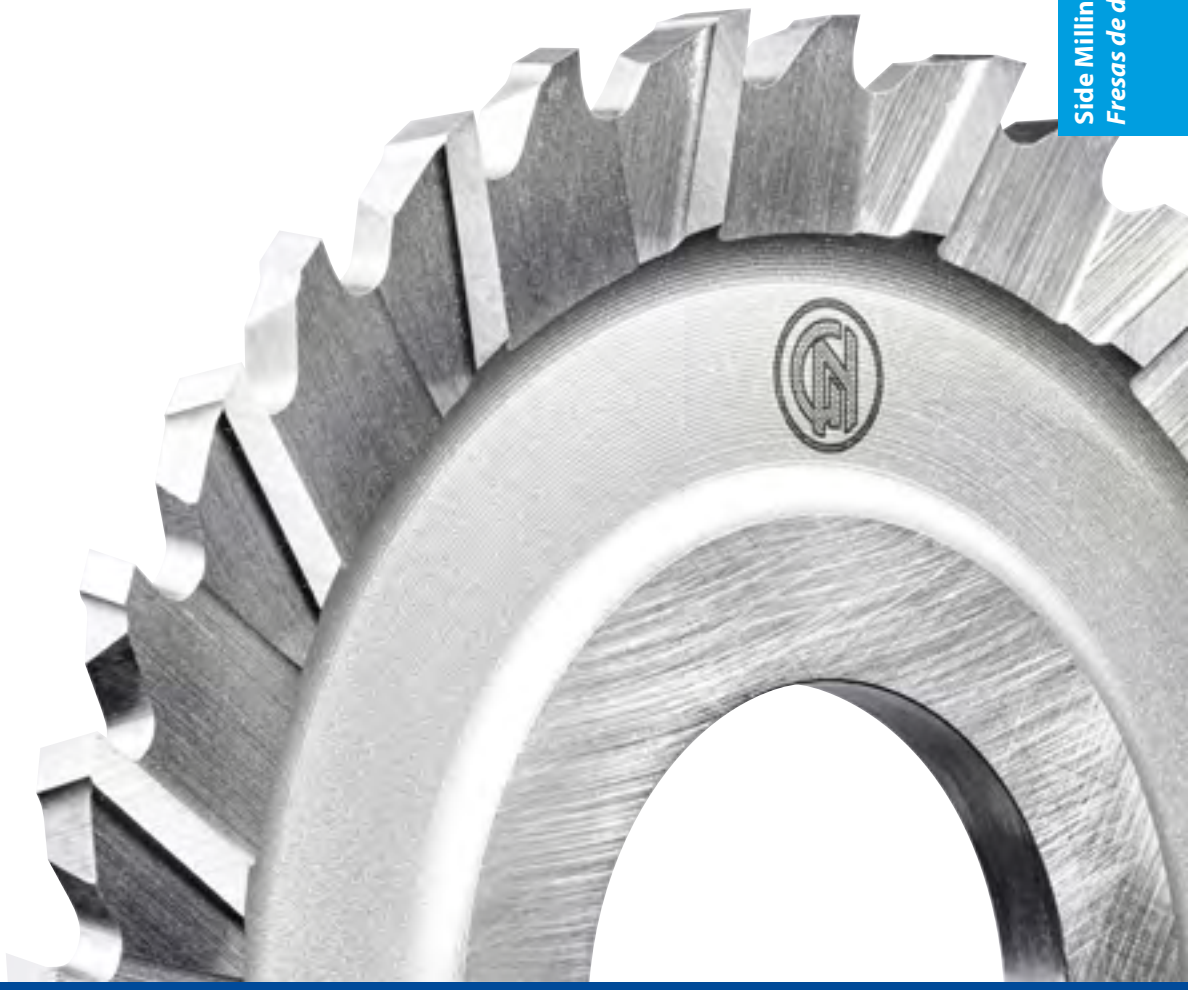

Special precision cutting tools
Herramientas de corte especiales de alta precisión

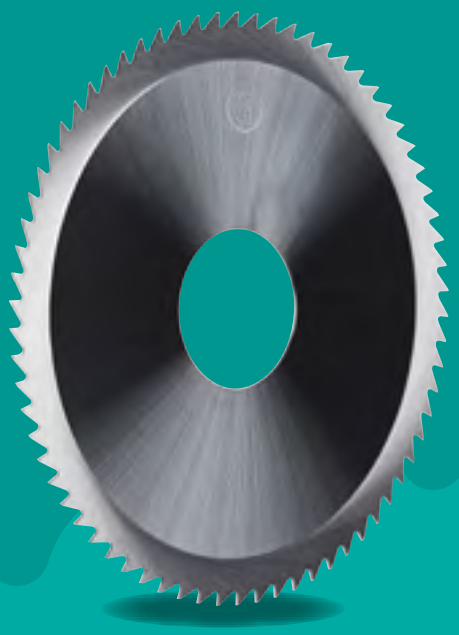

Circular Saw Blades
made of HSS/-Co and Solid Carbide
Ø up to 10" · widths from 0.004"

Sierras circulares
fabricadas con acero rápido (HSS)/aleado con cobalto y carburo sólido
Ø hasta 10" · anchos desde 0.004"

Side Milling Cutters
made of HSS/-Co and Solid Carbide
Ø up to 10" · widths from 0.05"

Fresas de disco
fabricadas con acero rápido (HSS)/aleado con cobalto y carburo sólido
Ø hasta 10" · anchos desde 0.05"

Profile Milling Cutters
made of HSS/-Co and Solid Carbide

Fresas de perfil
fabricadas con acero rápido (HSS)/aleado con cobalto y carburo sólido

Special Inquiries

Solicitudes especiales

Special Tools for different…

Herramientas especiales para distintas…

Cutting Operations

Operaciones de corte

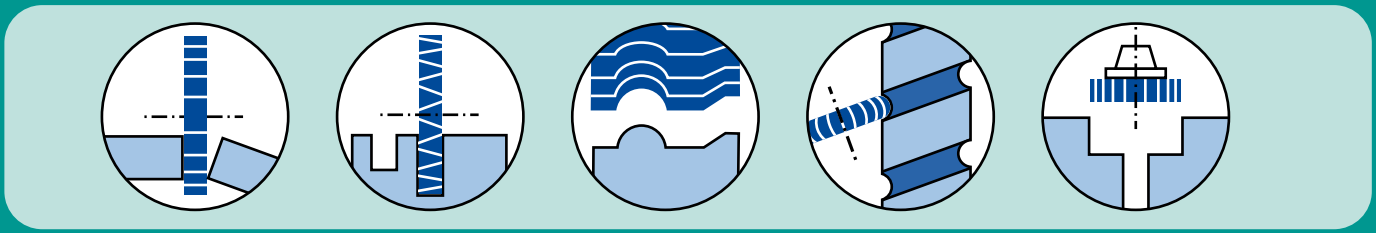

Industries

Industrias

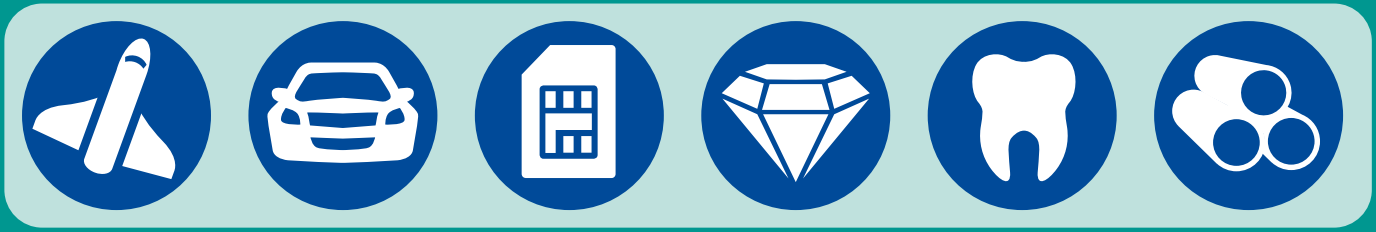

Materials

Materiales

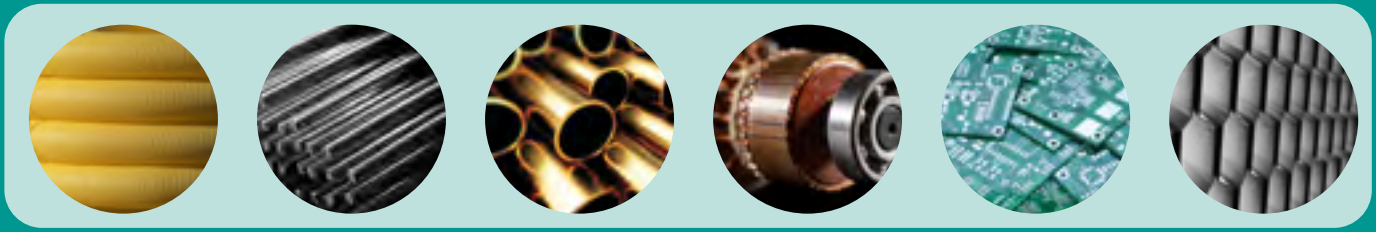

Machines

- Pipe Cutting Machines
- Orbital Pipe Saws
- Dicing & Depaneling Machines
- Milling Machines
- Rotary Transfer Machines
- Multi-Spindle Automatics
- Special Machines

Máquinas

- *Máquinas cortatubos*
- *Sierras orbitales para tuberías*
- *Troqueladoras y máquinas para la separación de placas*
- *Fresadoras*
- *Máquinas de transferencia rotativas*
- *Tornos multihusillos*
- *Máquinas especiales*

Customize your cutting tool …

Personalice su herramienta de corte

Product related inquiries …

Solicitudes relacionadas con el producto …

BASIC Form:
For tools with most common features

*Forma **BASIC:***
para herramientas con las propiedades más comunes

ADVANCED Form:
For tools with special features

*Forma **ADVANCED:***
para herramientas con propiedades especiales

PDF-Form "Product related – **BASIC**"
*Formulario "producto relacionado – **BASIC**"*

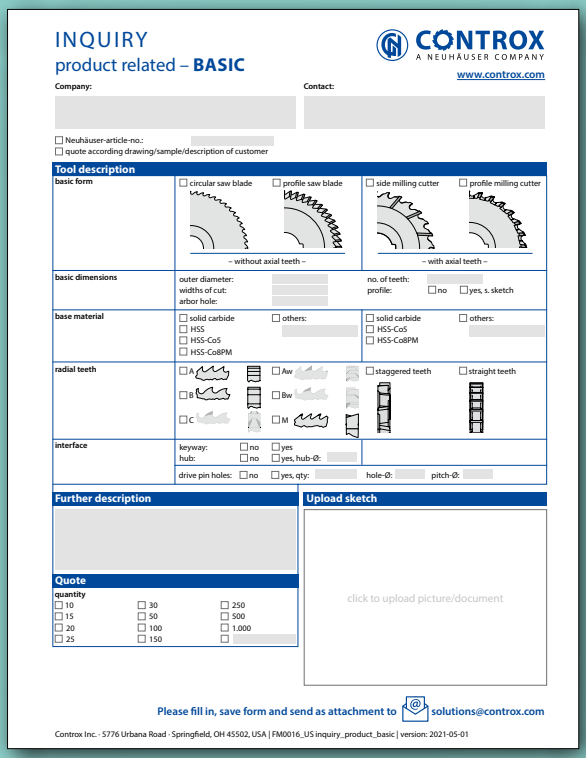
INQUIRY
product related – **BASIC**

CONTROX
A NEUHÄUSER COMPANY
www.controx.com

Company: Contact:

☐ Neuhäuser-article-no.:
☐ quote according drawing/sample/description of customer

Tool description

basic form: ☐ circular saw blade ☐ profile saw blade – without axial teeth – ☐ side milling cutter ☐ profile milling cutter – with axial teeth –

basic dimensions: outer diameter: / widths of cut: / arbor hole: / no. of teeth: / profile: ☐ no ☐ yes, s. sketch

base material: ☐ solid carbide ☐ HSS ☐ HSS-Co5 ☐ HSS-Co8PM ☐ others: / ☐ solid carbide ☐ HSS-Co5 ☐ HSS-Co8PM ☐ others:

radial teeth: ☐ A ☐ B ☐ C ☐ Aw ☐ Bw ☐ M ☐ staggered teeth ☐ straight teeth

interface: keyway: ☐ no ☐ yes; hub: ☐ no ☐ yes, hub-Ø: ; drive pin holes: ☐ no ☐ yes, qty: hole-Ø: pitch-Ø:

Further description

Quote
quantity
☐ 10 ☐ 15 ☐ 20 ☐ 25 ☐ 30 ☐ 50 ☐ 100 ☐ 150 ☐ 250 ☐ 500 ☐ 1.000 ☐

Upload sketch
click to upload picture/document

Please fill in, save form and send as attachment to solutions@controx.com

Controx Inc. - 5776 Urbana Road - Springfield, OH 45502, USA | FM0016_US inquiry_product_basic | version: 2021-05-01

https://www.neuhaeuser-controx.de/inquiry-basic-us.pdf

Download
descarga

PDF-Form "Product related – **ADVANCED**"
*Formulario "producto relacionado – **ADVANCED**"*

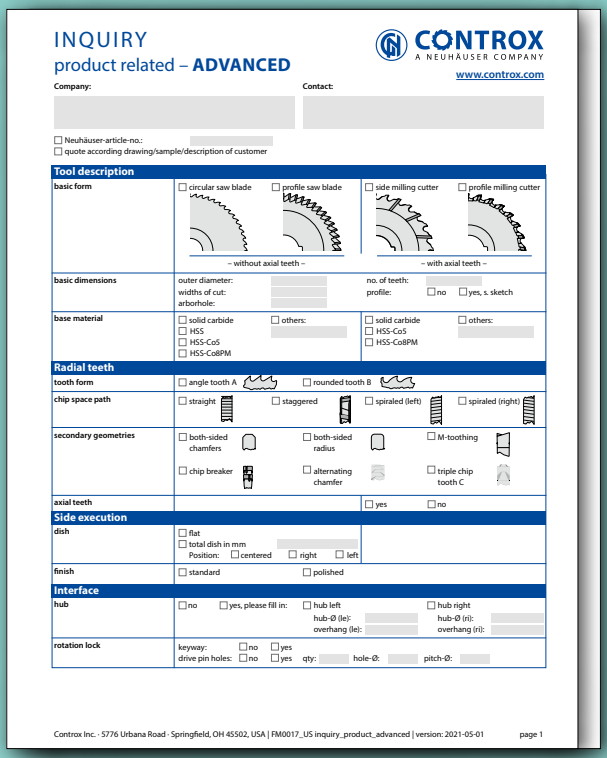
INQUIRY
product related – **ADVANCED**

CONTROX
A NEUHÄUSER COMPANY
www.controx.com

Company: Contact:

☐ Neuhäuser-article-no.:
☐ quote according drawing/sample/description of customer

Tool description

basic form: ☐ circular saw blade ☐ profile saw blade – without axial teeth – ☐ side milling cutter ☐ profile milling cutter – with axial teeth –

basic dimensions: outer diameter: / widths of cut: / arborhole: / no. of teeth: / profile: ☐ no ☐ yes, s. sketch

base material: ☐ solid carbide ☐ HSS ☐ HSS-Co5 ☐ HSS-Co8PM ☐ others: / ☐ solid carbide ☐ HSS-Co5 ☐ HSS-Co8PM ☐ others:

Radial teeth

tooth form: ☐ angle tooth A ☐ rounded tooth B

chip space path: ☐ straight ☐ staggered ☐ spiraled (left) ☐ spiraled (right)

secondary geometries: ☐ both-sided chamfers ☐ both-sided radius ☐ M-toothing ☐ chip breaker ☐ alternating chamfer ☐ triple chip tooth C

axial teeth: ☐ yes ☐ no

Side execution

dish: ☐ flat ☐ total dish in mm Position: ☐ centered ☐ right ☐ left

finish: ☐ standard ☐ polished

Interface

hub: ☐ no ☐ yes, please fill in: ☐ hub left hub-Ø (le): overhang (le): ☐ hub right hub-Ø (ri): overhang (ri):

rotation lock: keyway: ☐ no ☐ yes; drive pin holes: ☐ no ☐ yes qty: hole-Ø: pitch-Ø:

Controx Inc. - 5776 Urbana Road - Springfield, OH 45502, USA | FM0017_US inquiry_product_advanced | version: 2021-05-01 page 1

https://www.neuhaeuser-controx.de/inquiry-advanced-us.pdf

Download
descarga

Download PDF-forms via: • Scanning QR-code • link to website

Send to solutions@controx.com

Descarga de formularios en PDF mediante: • Escaneo de código QR • enlace al sitio web

Enviar a solutions@controx.com

… or let us customize your cutting tool

… o bien deje que se la personalicemos nosotros

Application related inquiries

Solicitudes relacionadas con la aplicación

APPLICATION Form:
Describe your application and we design your tool

*Forma **APPLICATION:** describa su aplicación y diseñaremos su herramienta*

PDF-Form "**APPLICATION** related"
*Formulario "relacionado con la **APLICACIÓN**"*

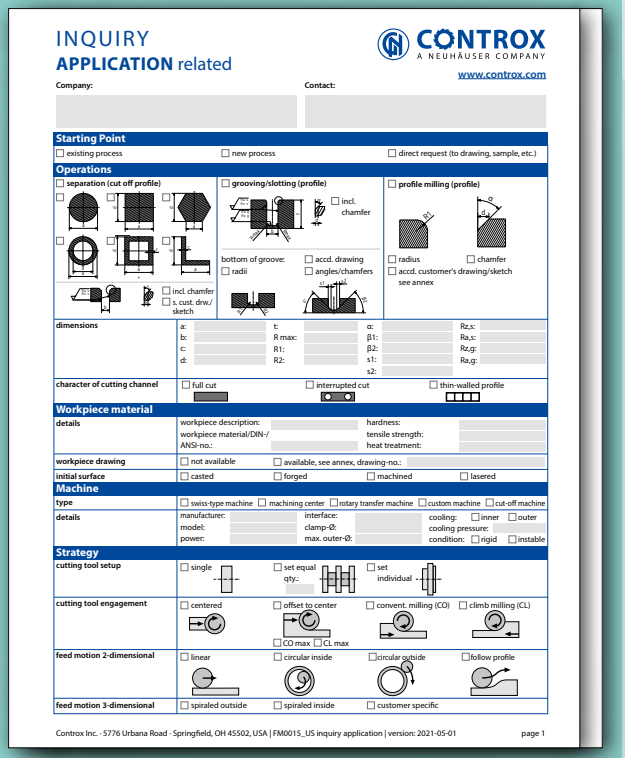

INQUIRY
APPLICATION related

CONTROX
A NEUHÄUSER COMPANY
www.controx.com

Company: **Contact:**

Starting Point
☐ existing process ☐ new process ☐ direct request (to drawing, sample, etc.)

Operations
☐ separation (cut off profile) ☐ grooving/slotting (profile) ☐ profile milling (profile)
☐ incl. chamfer ☐ s. cust. drw./sketch
☐ incl. chamfer
bottom of groove: ☐ radii ☐ accd. drawing ☐ angles/chamfers
☐ radius ☐ chamfer ☐ accd. customer's drawing/sketch see annex

dimensions	a:	t:	α:	Rz,s:	
	b:	R max:	β1:	Ra,s:	
	c:	R1:	β2:	Rz,g:	
	d:	R2:	s1:	Ra,g:	
			s2:		

character of cutting channel ☐ full cut ☐ interrupted cut ☐ thin-walled profile

Workpiece material

details	workpiece description:		hardness:	
	workpiece material/DIN-/ANSI-no.:		tensile strength:	
			heat treatment:	
workpiece drawing	☐ not available	☐ available, see annex, drawing-no.:		
initial surface	☐ casted	☐ forged	☐ machined	☐ lasered

Machine

type	☐ swiss-type machine ☐ machining center ☐ rotary transfer machine ☐ custom machine ☐ cut-off machine			
details	manufacturer:	interface:	cooling: ☐ inner ☐ outer	
	model:	clamp-Ø:	cooling pressure:	
	power:	max. outer-Ø:	condition: ☐ rigid ☐ instable	

Strategy

cutting tool setup	☐ single	☐ set equal qty.:	☐ set individual	
cutting tool engagement	☐ centered	☐ offset to center ☐ CO max ☐ CL max	☐ convent. milling (CO)	☐ climb milling (CL)
feed motion 2-dimensional	☐ linear	☐ circular inside	☐ circular outside	☐ follow profile
feed motion 3-dimensional	☐ spiraled outside	☐ spiraled inside	☐ customer specific	

Controx Inc. · 5776 Urbana Road · Springfield, OH 45502, USA | FM0015_US inquiry application | version: 2021-05-01 page 1

https://www.neuhaeuser-controx.de/inquiry-application-us.pdf

Download
descarga

Applications by industries …
Aplicaciones por industrias…

Automotive and Mechanical Engineering
Ingeniería de la automoción y mecánica

cut-off- and dicing saws · circular knives and cutting wheels · form milling cutters · oil groove cutters, splitting saw blades, gap saw blades · prism cutters, half-round cutters · roll forming tools, pins · perforating knives · keyseat cutters, t-slot milling cutters

sierras de inglete y rebanadoras · cuchillas circulares y discos de corte · fresas para moldes · cortadores para ranuras de lubricación, hojas de sierra separadoras, hojas de sierra para huecos · cortadores de prisma, cortadores semirredondos · herramientas para laminados, pines · cuchillas perforadoras · cortadores keyseat, fresas para ranuras en T

Electronics
Electrónica

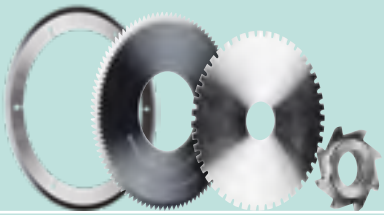

insulation groove cutters · collector cutters, commutator cutters · balancing cutters · V-scoring blades, V-groove cutters · cutting saws for depanelling, depanelling knives · scoring saws · circular knives, crush cut knives · profile-, form-, contour milling cutters · circular saw blades · blanks for CBN- and diamond cutting wheels

cortadores para ranuras de aislamiento · cortadores para colectores, cortadores para conmutadores · cortadores compensadores · cuchillas con punta en V, cortadores para ranuras en V · sierras de corte para separación de placas, cuchillas para separación de placas · sierras base · cuchillas circulares, cuchillas para triturar · fresas para perfiles, moldes y contornos · hojas de sierra circulares · planchas para discos de corte CBN y de diamante

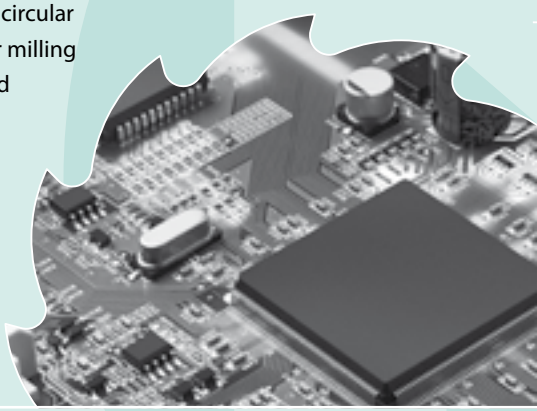

Fashion
Moda

circular jeweler saw blades, jewelry slotting saw blades · shearing rollers · thin metal slitting saw blades · KZA cutter

hojas de sierra para joyería circulares, hojas de sierra para ranurado en joyería · rodillos de corte · hojas de sierra para el corte de metales delgados · cortador KZA

Tubes & Pipes
Tubos y tuberías

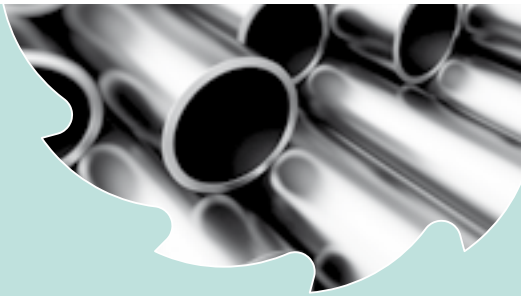

orbital saw blades, splitting saws · chamfer cutters, double angle milling cutters, V-groove cutters · saw blades for Georg Fischer and Axxair pipe cutting machines · sickle knives · circular saw blades · metal slitting saw blades

hojas de sierra orbitales, sierras separadoras · cortadores de chaflanes, fresas de doble ángulo, cortadores de ranuras en V · hojas de sierra para máquinas de corte de tuberías Georg Fischer y Axxair · cuchillas falciformes · hojas de sierra circulares · hojas de sierra para el corte de metales

Medical
Industria médica

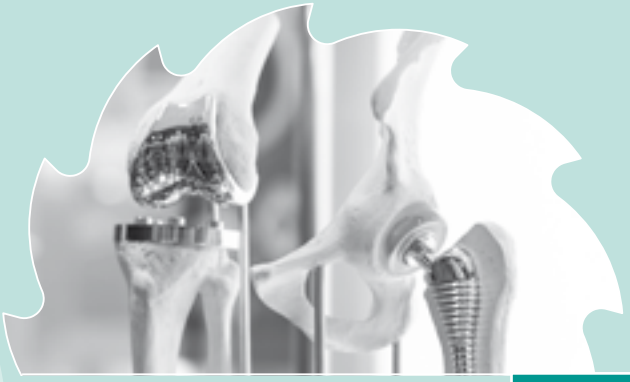

oscillating cast saw blades · ring saws · form milling cutters

hojas de sierra de fundición oscilantes · sierras de anillo · fresas para moldes

Aerospace
Industria aeroespacial

honeycomb tools for Nomex, Kevlar, aluminum, titanium, etc. (Core Cut, Valve Type Cut, Profile Cut, Hollow Drill) · panel routers (Panel Cut, Decoring Cut) · specials

herramientas en nido de abeja para Nomex, Kevlar, aluminio, titanio, etc. (corte de núcleos, corte tipo válvula, corte de perfiles · broca hueca) · routers de panel (corte de paneles, corte para eliminación de machos) · especiales

https://www.neuhaeuser-controx.de/NH-Controx-Comp-Catalog-UsEs21-web.pdf

Tools for different industries

Aerospace
Industria aeroespacial

Automotive & Mechanical Engineering
Ingeniería de la automoción y mecánica

Electronics
Electrónica

Fashion
Moda

Medical
Industria médica

Tubes & Pipes
Tubos y tuberías

$$V_c = \frac{d \times \pi \times n}{1000} \text{ m/min.}$$

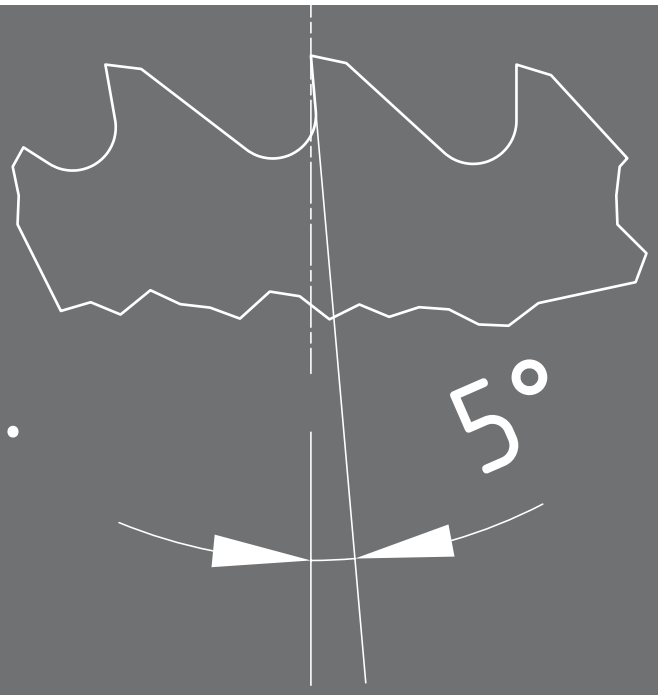

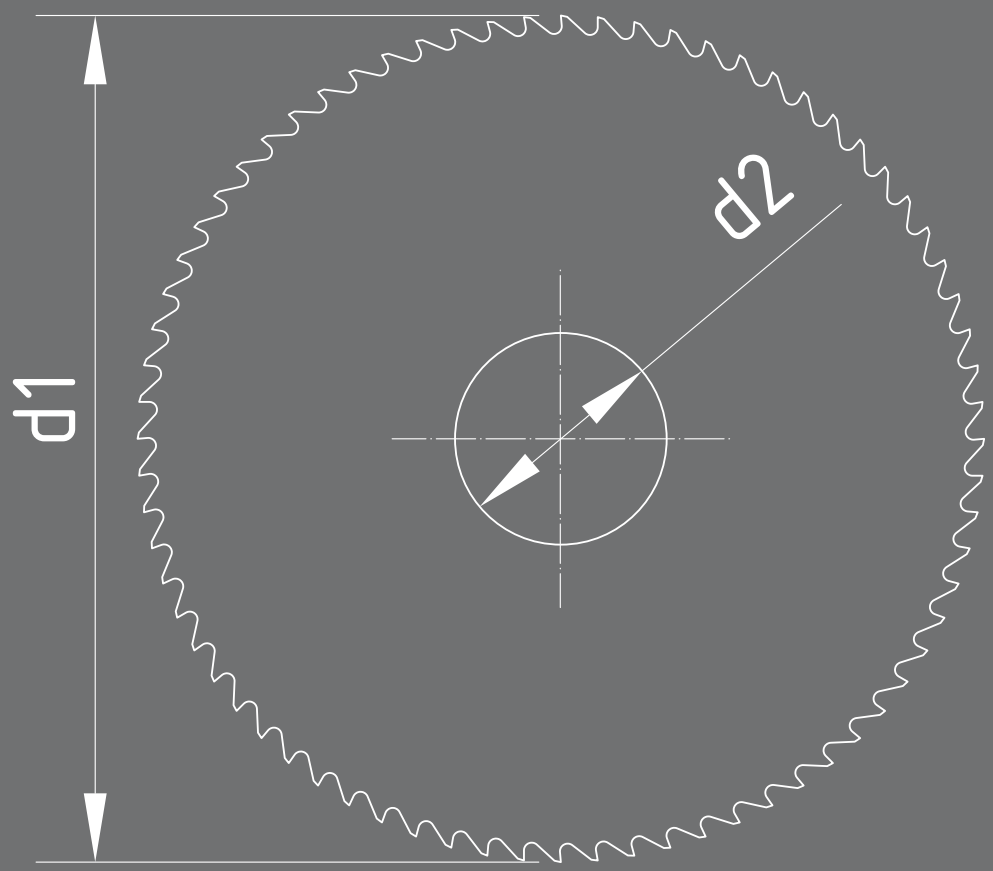

Tooth forms
FOR CIRCULAR SAW BLADES

Formas del diente
PARA SIERRAS DE CORTE DE METALES

Tooth form A (Angular Tooth):
For slitting shallow cutting depths and cutting fine profiles and tubes in abrasive and high-strength materials. Due to the lower rake angle of 5°, this tooth form is particularly suitable for machining brittle, short-chipping materials.

Forma del diente A (dentado angular):
Para profundidades de corte poco profundos y para el corte de perfiles y tubos finos en materiales abrasivos y de alta resistencia, gracias al ángulo de rebaje inferior de 5°, esta forma de dentado es especialmente adecuado para el mecanizado de materiales frágiles y materiales con viruta corta.

Angular Tooth **A**
*Dentado angular **A***

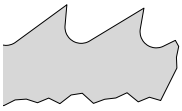

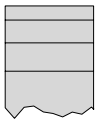

Angular Tooth with alternating chamfers **Aw**
*Dentado angular con chaflanes alternantes **Aw***

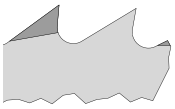

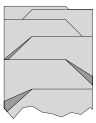

Tooth form B (Rounded Tooth):
For slitting greater cutting depths and for cutting thick-walled tubes and profiles in abrasive and high-strength materials. The higher rake angle of 15° makes this tooth form particularly suitable for machining tough, long-chipping materials.

Forma del diente B (dentado redondo):
Para profundidades de corte mayores y para el corte de perfiles y tubos de paredes gruesas en materiales abrasivos y de alta resistencia. El ángulo de rebaje mayor de 15° hace que esta forma del dentado sea especialmente adecuada para el mecanizado de materiales duros y materiales con viruta larga.

Rounded Tooth **B**
*Dentado redondo **B***

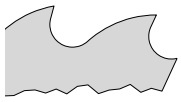

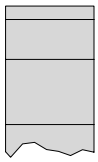

Rounded Tooth with alternating chamfers **Bw**
*Dentado redondo con chaflanes alternantes **Bw***

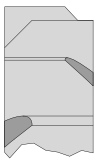

Tooth form C (Triple Chip Tooth):
For cutting solid material and thick-walled pipes.
The tooth form creates a centering effect due to the higher pre-cutting tooth and thus prevents the saw from off-centered running.

Forma del diente C (diente astillado triple):
Para cortar material sólido y para tuberías de paredes gruesas. La forma del diente crea un efecto de centraje debido al dentado de precorte más elevado lo que evita que la sierra funcione descentrada.

Triple Chip Tooth **C**
*Diente astillado triple **C***

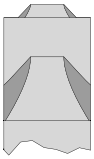

Radial Cutting Depth

FOR CIRCULAR SAW BLADES & SIDE MILLING CUTTERS

Profundidad de corte radial

PARA SIERRAS DE CORTE DE METALES Y FRESAS DE DISCO

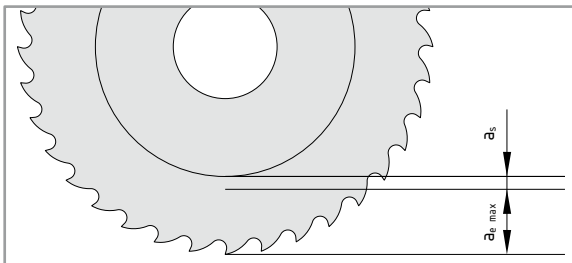

$a_{e\,max}$ = maximum radial cutting depth
profundidad de corte radial máxima

a_s = safety distance
distancia de seguridad

ISO-Tolerances

VALUES IN µ = 1/1000 MM

Tolerancias ISO

VALORES EN µ = 1/1000 MM

Tolerances Tolerancía	Nominal Sizes in mm Tamaños nominales en mm — from … up to … desde … hasta …										
	1 3	3 6	6 10	10 18	18 30	30 50	50 80	80 120	120 180	180 250	250 315
d 9	−20 −45	−30 −60	−40 −76	−50 −93	−65 −117	−80 −142	−100 −174	−120 −207	−145 −245	−170 −285	−190 −320
d 11	−20 −80	−30 −105	−40 −130	−50 −160	−65 −195	−80 −240	−100 −290	−120 −340	−145 −395	−170 −460	−190 −510
e 7	−14 −24	−20 −32	−25 −40	−32 −50	−40 −61	−50 −75	−60 −90	−72 −107	−85 −125	−100 −140	−110 −162
e 8	−14 −28	−20 −38	−25 −47	−32 −59	−40 −73	−50 −89	−60 −106	−72 −126	−85 −148	−100 −172	−110 −191
h 6	0 −6	0 −8	0 −9	0 −11	0 −13	0 −16	0 −19	0 −22	0 −25	0 −29	0 −32
h 7	0 −10	0 −12	0 −15	0 −18	0 −21	0 −25	0 −30	0 −35	0 −40	0 −46	0 −52
h 8	0 −14	0 −18	0 −22	0 −27	0 −33	0 −39	0 −46	0 −54	0 −63	0 −72	0 −81
h 10	0 −40	0 −48	0 −58	0 −70	0 −84	0 −100	0 −120	0 −140	0 −160	0 −185	0 −210
h 11	0 −60	0 −75	0 −90	0 −110	0 −130	0 −160	0 −190	0 −220	0 −250	0 −290	0 −320
h 12	0 −100	0 −120	0 −150	0 −180	0 −210	0 −250	0 −300	0 −350	0 −400	0 −460	0 −520
js 11	+30 −30	+37,5 −37,5	+45 −45	+55 −55	+65 −65	+80 −80	+95 −95	+110 −110	+125 −125	+145 −145	+160 −160
js 14	+125 −125	+150 −150	+180 −180	+215 −215	+260 −260	+310 −310	+370 −370	+435 −435	+500 −500	+575 −575	+650 −650
js 15	+200 −200	+240 −240	+290 −290	+350 −350	+420 −420	+500 −500	+600 −600	+700 −700	+800 −800	+925 −925	+1050 −1050
js 16	+300 −300	+375 −375	+450 −450	+550 −550	+650 −650	+800 −800	+950 −950	+1100 −1100	+1250 −1250	+1450 −1450	+1600 −1600
k 10	+40 0	+48 0	+58 0	+70 0	+84 0	+100 0	+120 0	+140 0	+160 0	+185 0	+210 0
k 11	+60 0	+75 0	+90 0	+110 0	+130 0	+160 0	+190 0	+220 0	+250 0	+290 0	+320 0
k 12	+100 0	+120 0	+150 0	+180 0	+210 0	+250 0	+300 0	+350 0	+400 0	+460 0	+520 0
k 14	+250 0	+300 0	+360 0	+430 0	+520 0	+620 0	+740 0	+870 0	+1000 0	+1150 0	+1300 0
k 16	+600 0	+750 0	+900 0	+1100 0	+1300 0	+1600 0	+1900 0	+2200 0	+2500 0	+2900 0	+3200 0
H 6	+6 0	+8 0	+9 0	+11 0	+13 0	+16 0	+19 0	+22 0	+25 0	+29 0	+32 0
H 7	+10 0	+12 0	+15 0	+18 0	+21 0	+25 0	+30 0	+35 0	+40 0	+46 0	+52 0
H 11	+60 0	+75 0	+90 0	+110 0	+130 0	+160 0	+190 0	+220 0	+250 0	+290 0	+320 0

Chart for Speed & Feed

Gráfico para velocidad y alimentación

Material groups	Material	Condition	Hardness		Speed (SFPM)		Feed p. Tooth (")	
			HB	RC	Solid Carbide	HSS	Plain Side	Side Chip
Aluminum – Cast Alloy, Hardened	Sand and Permanent Mold Castings	solution treated and aged	70 to 125		1100	900	.0002-.0005	.001-.002
	Die Castings, Si < 12%, except 390.0 and 392.0	solution treated and aged	70 to 125		1100	300		
	Die Castings, Si > 12%, except 390.0 and 392.0	solution treated and aged	70 to 125		900	225		
Aluminum Alloy – Aerospace, Hardened (Si < 0.8%)	2014-T6, 2017-T4, 2024-T4, 6061-T6, 7050-T617, 7075-T6, 7079-T6, 7178-T6	solution treated and aged	75 to150		1200	700		
Cast Iron – Ductile (Nodular)	ASTM A536 Grade 80-55-06	as cast	190 to 260	(10) to 26	375	60-100	.0001-.0003	.0007-.0012
	ASTM A538 Grade 100-70.03	heat treated	240 to 300	22 to 32	275	50-80		
	ASTM A535 Grade 120-90.02	quenched and tempered	270 to 330	28 to 35	175	40-60		
		quenched and tempered	330 to 400	32 to 43	175	30-40		
	NI-Resist Ductile, ASTM A439 and A571	annealed	140 to 275	28	175	20-40		
Cast Iron – Gray	ASTM A48 Class 20 and 25	as cast	120 to 200	(6) to (15)	500	90-125		
	ASTM A48 Class 30 to 50	as cast	190 to 260	(14) to 26	400	60-125		
	ASTM A48 Class 55 and 60	as cast, heat treated	250 to 320	25 to 34	350	40-60		
	NI-Resist, ASTM A436 Type 1 to 4	as cast	150 to 250	(7) to 25	250	60-90		
Cast Iron – Malleable	Ferritic and Pearlitic, ASTM A47 and ASTM A220	malleablized and heat treated	160 to 240	22	275	80-120		
	Tempered Martensite, 53004, 6000314, 70002/3	malleablized and heat treated	200 to 260	(13) to 26	260	70-110		
	Tempered Martensite, A220 Grade 80002 and 90001	malleablized and heat treated	240 to 320	23 to 34	230	40-80		
Copper Alloy	Free Cutting Brasses and Bronzes, Leaded Brass and Bronze, Leaded Naval Brass	annealed, cold drawn, as cast	110 to 240	(5) to 23	750	125-400		
	Red Brass, Yellow Brass, Cartridge Brass, Muntz Metal, Silicon Bronze, Manganese Bronze, Aluminum Brass, Admiralty Brass	annealed, cold drawn, as cast	110 to 240	(11) to 23	600	125-400		
	Beryllium Copper, Phosphor Bronze, Aluminum Bronze, Copper Nickel, Electrolytic, Tough Copper, Oxygen Free Hard Copper	annealed, cold drawn, as cast	110 to 240	(11) to 23	500	80-200		
Magnesium Alloy	Wrought and Cast	annealed, solution treated and aged	50 to 90		1300	800-1000		
Nickel Alloy	Nickel 200 to 230, Monel Alloys, Duranickel, Permanickel	annealed, cold drawn, as cast	115 to 240	22	250	60-90		
		solution treated, aged	240 to 360	23 to 39	150	20-60		
Stainless Steel – Hardenable	AISI 400 Series, Martensitic, 403, 410, 414, 416, 420, 422, 431, 440, 501, 502	annealed	135 to 225	20	360	100-150		
		annealed	225 to 275	20 to 28	340	60-130		
		quenched and tempered	275 to 350	28 to 38	320	50-80		
		quenched and tempered	350 to 390	38 to 42	275	40-70		
Stainless Steel – Nonhardenable	AISI 200 and 300 Series, Austenitic	annealed	135 to 185	(9)	450	100-160		
	AISI 400 Series, Ferritic	annealed	135 to 185	(9)	425	90-160		
Stainless Steel – Precipitation Hardening	SAE PH Series and AISI 600 Series, 15-5PH, 16-6PH, 17-4PH, 17-7PH, PH15-7Mo, AM-350, AM-355, AM 363, PH13-8Mo, PH14-8Mo	annealed	150 to 250	24	360	80-120		
		precipitation hardened	275 to 325	28 to 35	280	60-90		
		precipitation hardened	325 to 375	35 to 40	220	50-80		
		precipitation hardened	375 to 390	40 to 42	120	40-70		
Steel – Alloy, Low Carbon (< 0.3%)	AISI 4012 to 4028, 4118, 4320, 4419 to 4427, 4615 to 4626, 4718, 4720, 4815 to 4820, 5015, 5115 to 5120, 6118, 8115, 8617 to 8627, 8720, 8822, 94B15, 94B17	hot rolled, normalized, cold drawn	125 to 225		425	100-150		
		normalized, quenched and tempered	225 to275		350	85-125		
		quenched and tempered	275 to 325	28 to 35	325	65-100		
		quenched and tempered	325 to 375	35 to 40	240	50-80		
Steel – Alloy, Medium and High Carbon (> 0.3%)	AISI 1330 to 1345, 4032 to 4047, 4130 to 4161, 50B40 to 50B60, 5130 to 5160, 51B60, 6150, 81B45, 8630 to 8660, 8740, 8742, 9254 to 9262, 94B30, 50100, 51100, 52100, M-50	hot rolled, annealed, cold drawn	175 to 225	(8) to 20	400	80-140		
		normalized, quenched and tempered	225 to 275	20 to 28	320	80-120		
		normalized, quenched and tempered	275 to 325	28 to 35	250	60-100		
		normalized, quenched and tempered	325 to 375	35 to 40	235	50-80		
		quenched and tempered	375 to 390	40 to 42	200	40-70		
Steel – Cast Alloy	Low Carbon, AISI 1320, 2315, 2320, 4110, 4120, 4320, 8020, 8620	as cast, annealed, normalized	150 to 250	(6) to 24	360	80-175		
		as cast, heat treated	250 to 300	24 to 32	275	60-100		
	Medium Carbon, AISI 1330, 1340, 2325, 2330, 4125, 4130, 4140, 4330, 4340, 8030, 80B30, 8040, 8430, 8440, 8630, 8640, 9525, 9530, 9535	as cast, annealed, normalized	175 to 250	(8) to 24	350	80-175		
		as cast, heat treated	250 to 300	25 to 32	280	60-100		
		as cast, heat treated	300 to 350	32 to 38	220	60-90		
		heat treated	350 to 390	38 to 42	180	40-60		
Steel – Cast Carbon	Low Carbon, AISI 1010, 1020	as cast, annealed, normalized	100 to 150		450	120-180		
	Medium Carbon, AISI 1030, 1040, 1050	as cast, annealed, normalized	125 to 225		425	100-150		
		as cast, heal treated	225 to 300		300	80-120		
Steel – Free Machining Alloy	AISI 4140, 4150 and 41LXX to 86LXX Grades	hot rolled, annealed, cold drawn	150 to 250	(7) to 24	475	110-200		
		quenched and tempered	250 to 300	25 to 32	360	90-125		
		quenched and tempered	300 to 375	32 to 40	250	80-110		
		quenched and tempered	375 to 390	40 to 42	220	50-70		
Steel – Maraging	18 Ni Grades 200, 250, 300 and 350	annealed	275 to 325	28 to 35	300	70-110		
Steel – Mold	P2, P3, P4, P5, P6, P20, P21, P20	annealed	100 to 150	up to (7)	450	90-150		
		annealed	150 to 200	(7) to (13)	350	80-120		
		heat treated		28 to 35	280	60-90		
Steel – Nitriding	Nitralloy 125 to 230, EZ and N, Nitrex 1	annealed	200 to 250		350	80-130		
		normalized, quenched and tempered	300 to 350	32 to 38	275	50-90		
Steel – Plain Carbon Free Machining	AISI 1108 to 1126 and 1211 to 1215	hot rolled, annealed	100 to 175		575	145-225		
	AISI 10LXX, 11LXX and 12LXX Grades	normalized, cold drawn	175 to 250	(8) to 25	520	100-200		
	AISI 1132 to 1151	hot rolled, annealed, cold drawn	175 to 225	(8) to 20	550	125-250		
		quenched and tempered	275 to 325	28 to 35	360	100-200		
		quenched and tempered	325 to 375	35 to 40	275	60-120		
		quenched and tempered	375 to 390	40 to 42	220	50-80		
Steel – Plain Carbon, Low Carbon (< 0.3%)	AISI 1055 to 1026 and 1513 to 1522	hot rolled, annealed, cold drawn	100 to 175		530	150-220		
		hot rolled, normalized, cold drawn	175 to 225		450	110-200		
		cold drawn	225 to 275		425	80-100		
Steel – Plain Carbon, Medium & High Carbon (> 0.3%)	AISI 1029 to 1053 and 1524 to 1552 AISI 1055 to 1095 and 1561 to 1572	hot rolled, annealed, cold drawn	125 to 225	(5) to 20	500	140-225		
		normalized, quenched and tempered	225 to 275	20 to 28	425	80-125		
		quenched and tempered	275 to 325	28 to 35	330	60-100		
		quenched and tempered	325 to 375	35 to 40	275	50-90		
		quenched and tempered	375 to 390	40 to 42	240	40-60		
Steel – Tool	High Speed, Cold and Hot Work, Shock Resisting A2, D2, S6, S7, O-Series, L-Series, etc.	annealed	150 to 200	(7) to (13)	360	90-140		
		annealed	200 to 250	(13) to 24	300	70-110		
Steel – Ultra High Strength (Not AISI)	AMS6421 (98B37 Mod.), AMS 6422, (98BV40), AMS6424, AMS6427, AMS6428, AMS6430, AMS6432, AMS6433, AMS6434, AMS6436, AMS6442, 300M, D6ac	annealed	220 to 300	(18) to 32	250	70-100		
		normalized	300 to 350	32 to 38	180	50-90		
		normalized	350 to 400	38 to 43	130	40-60		
		quenched and tempered		43 to 48	100	20-40		
		quenched and tempered		48 to 52	80	15-30		
Super Alloy – High Temperature	Nickel Base Alloys, Incoloy, Inconel, Nimonic, Hastelloy, Astroloy, Rene, Waspaloy	solution treated	200 to 300	(14) to 32	80	12-25		
		solution treated and aged	300 to 400	32 to 43	50	10-20		
	Cobalt Base Alloys, Haynes, AiResist, S-816, J-1570, J-1650	solution treated	200 to 300	(14) to 32	60	10-20		
		solution treated and aged	300 to 390	32 to 42	50	8-15		
Titanium and Titanium Alloy	Commercially Pure and Low Alloyed	annealed	110 to 180	(9)	410	100-180		
		annealed	180 to 250	24	340	80-160		
	Alpha and Alpha-Beta Alloys, 6Al-4V, 5Al-2.5Sn, 6Al-6V-2Sn, 6Al-2Sn-4Zr-2Mo, 8Al-1Mo-1V, 4Al-2Sn-2Zr.4Mo-4Cr (Ti-17)	annealed	300 to 380	32 to 41	300	50-110		
		solution treated and aged	320 to 380	34 to 41	230	50-100		
		solution treated and aged	380 to 440	41 to 47	230	35-80		
	Beta Alloys, 13V-11Cr-3Al, 3Al-8V-6Cr-4Mo-4Zr	annealed, solution treated	275 to 350	28 to 38	150	25-60		
		solution treated and aged	350 to 390	38 to 42	135	20-50		

Formulars

FOR THE CALCULATION OF CUTTING SPEED, RPM AND FEED RATE

Formularios

PARA EL CÁLCULO DE LA VELOCIDAD DE CORTE, R. P. M. Y VELOCIDAD DE ALIMENTACIÓN

cutting speed / *velocidad de corte*	$V_c = \frac{d \times \pi \times n}{1000}$ m/min.	d = Cutter-Ø / *Ø del corta dor* n = rpm / *rpm* π = 3,14
rpm / *rpm*	$n = \frac{V_c \times 1000}{d \times \pi}$ U/min.	
feed rate / *velocidad de alimentación*	$V_f = f_z \times Z \times n$ mm/min.	f_z = feed/tooth / *avance/diente* Z = No. of teeth / *No. of diente*

No definite values can be given for the feed per tooth (f_z), as these values depend on the working conditions of the tool, the tool dimension, the material to be machined and the cutting process. The values for the feed per tooth (f_z) reach from 0,005 up to approx. 0,2 mm per tooth.
Generally, when establishing the application data and cutting values the condition and stability of the whole system – machine, tool, workpiece and chucking – has to be included into the evaluation.

No pueden ofrecerse valores definitivos para el avance por diente (fz), ya que estos valores dependen de las condiciones de trabajo de la herramienta, las dimensiones de la herramienta, el material que debe mecanizarse y el proceso de corte.
Los valores para el avance por diente (fz) van de 0,005 hasta aprox. 0,2 mm por diente.
En general, al establecer los datos de aplicación y los valores de corte, debe incluirse en la evaluación el estado y la estabilidad de todo el sistema – máquina, herramienta, pieza de trabajo y sujeción.

RPM-Table

Tabla RPM

Tool/ *herramienta*	Cutting Speed V_c in m/min. *velocidad de corte V_c en m/min.*										
Ø d	10	12,5	16	20	25	32	40	50	63	80	100
2	1600	2000	2500	3200	4000	5100	6400	8000	10000	12700	16000
4	800	1000	1250	1600	2000	2550	3200	4000	5000	6350	8000
6	530	660	850	1060	1330	1700	2120	2650	3340	4240	5300
8	400	500	640	800	1000	1300	1600	2000	2500	3200	4000
10	320	400	500	630	800	1000	1300	1600	2000	2500	3200
12	270	330	420	530	660	850	1060	1330	1670	2120	2650
14	230	280	360	450	570	730	900	1140	1430	1800	2300
16	200	250	320	400	500	630	800	1000	1250	1600	2000
18	180	220	280	350	440	560	700	880	1100	1400	1770
20	160	200	250	320	400	500	630	800	1000	1250	1600
22	140	180	230	290	360	460	580	720	910	1160	1450
25	125	160	200	250	315	400	500	630	800	1000	1250
28	110	140	180	230	280	360	450	570	720	910	1140
32	100	125	160	200	250	315	400	500	630	800	1000
36	90	110	140	180	220	280	350	440	560	700	880
40	80	100	125	160	200	250	315	400	500	630	800
50	63	80	100	125	160	200	250	315	400	500	630
63	50	63	80	100	125	160	200	250	315	400	500
80	40	50	63	80	100	125	160	200	250	315	400
100	32	40	50	63	80	100	125	160	200	250	315
125	25	32	40	50	63	80	100	125	160	200	250
160	20	25	32	40	50	63	80	100	125	160	200
200	16	20	25	32	40	50	63	80	100	125	160
250	12	16	20	25	32	40	50	63	80	100	125
315	10	12	16	20	25	32	40	50	63	80	100
350	9	11	14	18	22	28	36	45	56	72	90

Values for cutting speed above 100 m/min.
= V_c-Value × factor 10 and rpm × factor 10.

Values for cutting speed above 100 m/min.
= V_c-Value × factor 10 and rpm × factor 10.

⚠ WARNING!

Any cutting tool may break or shatter under improper use. Government regulations require use of safety glasses and other appropriate safety equipment at all times in the vicinity of use. Do not touch cutting edges or chips with bare hands. Stop cutting when the tool becomes dull. Stop cutting operation immediately if you hear any strange sounds. Use correct tools for the operation. Check dimensions to ensure proper selection. Do not modify tools. Wet or dry grinding of cutting tools produces potentially hazardous dusts or mists; to avoid adverse health effects, use adequate ventilation and read the Material Safety Data Sheet for further application tool material or grade before grinding.

⚠ ¡ADVERTENCIA!

Cualquier herramienta de corte puede romperse o destruirse si no se utiliza de forma adecuada. Las regulaciones gubernamentales establecen el uso de gafas de seguridad y otro equipamiento de protección adecuado siempre que se utilicen o se esté cerca de dichas herramientas. No toque los filos ni las astillas sin guantes. Deje de cortar cuando la herramienta se apague. Detenga la operación de corte inmediatamente en caso de que escuche algún ruido extraño. Utilice herramientas adecuadas para la operación. Compruebe las dimensiones para garantizar una selección adecuada. No modifique las herramientas. El amolado en mojado o en seco de herramientas de corte genera polvos o neblinas potencialmente peligrosos; para evitar efectos perjudiciales para la salud, utilice una ventilación adecuada y lea la Hoja de datos de seguridad de los materiales para seguir aplicando el material de la herramienta o modificarlo antes del amolado.

WARNING: This product contains Cobalt, a chemical known to the State of California to cause cancer. For more information go to www.P65Warnings.ca.gov

ADVERTENCIA: Este producto contiene cobalto, un elemento químico que en el Estado de California está considerado como cancerígeno. Para más información visite www.P65Warnings.ca.gov

Limited Warranty

Neuhäuser warrants to original equipment manufacturers, distributors and industrial and commercial users of its products that each new product manufactured or supplied by Neuhäuser shall be free from defects in material and workmanship.

Neuhäuser's obligation under this warranty is limited to furnishing without additional charge a replacement or, at its option, repairing or issuing credit for any product which shall within one year from the date of sale be returned freight prepaid to the plant designated by a Neuhäuser representative and which upon inspection is determined by Neuhäuser to be defective in materials or workmanship.

Complete information as to operating conditions, machine setup and application of cutting fluid should accompany any product returned for inspection. The provisions of this warranty shall not apply to any Neuhäuser product which has been subjected to misuse, improper operating conditions, machine setup or application of cutting fluid or which has been repaired or altered if such repair or alteration in the judgment of Neuhäuser would adversely affect performance of the product.

THIS WARRANTY IS IN LIEU OF ALL OTHER WARRANTIES, EXPRESS OR IMPLIED, INCLUDING ANY IMPLIED WARRANTY OF MERCHANTABILITY OR FITNESS FOR A PARTICULAR PURPOSE.

Neuhäuser shall have no liability or responsibility on any claim of any kind, whether in contract, tort or otherwise, for any loss or damage arising out of, connected with, or resulting from the

Garantía limitada

Neuhäuser garantiza a los fabricantes de equipamiento original, distribuidores y usuarios industriales y comerciales de sus productos que todos los productos nuevos fabricados o suministrados por Neuhäuser estarán exentos de defectos tanto en lo referente al material como a la mano de obra.

La obligación de Neuhäuser según esta garantía se limita a facilitar sin tasas adicionales un reemplazo o, si así lo decide, reparar u otorgar crédito para cualquier producto que, en el plazo de un año a partir de la fecha de venta, se devuelva con el flete prepagado a la planta indicada por un representante de Neuhäuser y que una vez inspeccionado sea considerado por Neuhäuser defectuoso en cuanto al material o la mano de obra.

Cualquier producto devuelto para su inspección deberá incluir información completa sobre las condiciones de funcionamiento, la configuración de la máquina y la aplicación de fluido de corte. Las provisiones de esta garantía no se aplicarán a aquellos productos de Neuhäuser que hayan estado sujetos a un uso incorrecto, condiciones de funcionamiento, configuración de la máquina o aplicación del fluido de corte inadecuados o que hayan sido reparados o modificados si dicha reparación o modificación según Neuhäuser afectaría negativamente al rendimiento del producto.

ESTA GARANTÍA REEMPLAZA CUALQUIER OTRA GARANTÍA, EXPRESA O IMPLÍCITA, INCLUIDA CUALQUIER GARANTÍA IMPLÍCITA DE COMERCIALIDAD O APTITUD PARA UN FIN PARTICULAR.

Neuhäuser no asumirá ninguna responsabilidad sobre ninguna

manufacture, sale, delivery or use of any product sold hereunder, in excess of the cost of replacement or repair as provided herein. IN NO EVENT SHALL Neuhäuser BE LIABLE FOR ANY SPECIAL, INCIDENTAL OR CONSEQUENTIAL DAGAMGES.
Neuhäuser makes no other warranty, express or implied, except as set forth above; and Neuhäuser neither assumes nor authorizes any other person or entity to assume for it any other obligation or liability in connection with any of its products.
NOTICE: Because we are constantly engaged in a program of product improvement, tool specifications are subject to change at any time.

reclamación de ningún tipo, ya sea por contrato, daño jurídico o de otro tipo, por cualquier pérdida o daño que surja de, relacionado con, o resultante de la fabricación, la venta, el suministro o el uso de cualquier producto vendido a continuación, por un precio superior al coste de reemplazo o reparación según lo dispuesto en este documento.
EN NINGÚN CASO, Neuhäuser SERÁ RESPONSABLE DE NINGÚN DAÑO ESPECIAL, ACCIDENTAL O INDIRECTO.
Neuhäuser no ofrecerá ninguna otra garantía, expresa o implícita, excepto según lo estipulado arriba; y Neuhäuser tampoco asumirá ni autorizará a ninguna otra persona o entidad a asumir por ello ninguna responsabilidad con relación a cualquiera de sus productos.
AVISO: Debido a que estamos permanentemente comprometidos en un programa de mejora de producto, las especificaciones de la herramienta están sujetas a cambios en cualquier momento.

ADVICES:
By the publication of this catalogue, all former editions become invalid.
Reprint of this catalogue – also extracts only – is allowed only with our explicit permission.
Considering the continual technical improvements of our tools, we reserve the right to modify the selection in our catalogue. If a required tool is not available for this reason, we will quote you a substitute of equal or better technological standard. If you have any questions, please contact our sales department.

CONSEJOS:
Al publicar este catálogo, todas las ediciones anteriores dejan de tener validez.
La reimpresión de este catálogo, incluso solo un extracto, solo se permite con nuestro permiso explícito.
Teniendo en cuenta las mejoras técnicas continuas de nuestras herramientas, nos reservamos el derecho de modificar la selección en nuestro catálogo. Si por este motivo una herramienta necesaria no está disponible, le ofertaremos un reemplazo con un estándar tecnológico igual o mejor. Si tiene cualquier pregunta, póngase en contacto con nuestro departamento de ventas.

Terms of Delivery

I. General Information

1. Any and all deliveries made and services provided are subject to the Terms of Delivery at hand as well as to separate contractual agreements possibly concluded. Any deviating terms of purchase of the Buyer shall not become a constituent element of the contract even in case of order acceptance.
   A contract shall be established – for lack of specific agreement – with the written order confirmation of the Seller.
2. The Seller reserves property and copyrights for samples, cost estimates, drawings and similar information of physical and non-physical nature – also in electronic form; these may not be disclosed to third parties. The Seller undertakes not to disclose information and documents identified as confidential by the Buyer to third parties without his written consent.
3. Samples shall be supplied only against charges.
4. Verbal supplementary agreements do not exist. Modifications require written form in order to be effective.

II. Price and Payment

1. The prices – for lack of specific agreement – shall be ex works and do not include packaging. The quoted price of products does not include duty, tariffs, taxes or similar charges, which shall be borne by the Buyer, unless otherwise agreed upon in writing.
2. For lack of specific agreement, payment shall be effected immediately following delivery to the account of the Seller and without any deduction. The respective quantity delivered shall be charged.
3. The Buyer shall have the right to retain payments or to offset these against counterpayments only to the extent that his counterclaims are undisputed and determined
   legally binding.

III. Period of Delivery, Default in Delivery

1. The Period of Delivery results from the agreements entered into between the contracting parties. The prerequisite for compliance by the Seller is that any and all commercial and technical questions have been clarified between the contracting parties and that the Buyer has complied with any and all obligations under his responsibility, such as e.g. the procurement of the certificates or authorizations required by the authorities or performance of a down payment. Should this not be the case, the Period of Delivery will be extended appropriately. This shall not apply to the extent that the Seller is responsible for the delay.
2. Adherence to the Period of Delivery shall be subject to correct and on-time delivery to us on the part of our suppliers. The Seller shall inform the Buyer about emerging delays as soon as possible.
3. The Period of Delivery shall be deemed to have been complied with if the delivery item has left the factory of the Seller or if readiness for shipment has been announced.
4. In case that the shipment is delayed upon request of the Buyer, the Seller shall be entitled to otherwise dispose of the delivery item after fixing a reasonable deadline and its fruitless expiry and to supply the Buyer subject to a reasonably extended period. In case that the shipment is delayed on account of reasons for which the Buyer is responsible, the costs incurred as a result of such delay shall be charged to the Buyer, beginning one month after announcement of the readiness for shipment of the delivery item.
5. In case that non-compliance with the Period of Delivery is to be attributed to force majeure, labor disputes or other events beyond the sphere of influence of the Seller, the Period of Delivery shall reasonably be extended. The Seller shall inform the Buyer of the beginning and end of such circumstances as soon as possible.
6. In case that delivery is rendered entirely impossible or economically unreasonable for the Seller as a result of force majeure, labor disputes or other events beyond the sphere of influence of the Seller, the Seller shall have the right to either wholly or partially resign from the contract.
   Claims for damages of the Buyer on account of such resignation are excluded.
   If the Seller intends to make use of his right of resignation, he shall inform the Buyer immediately upon identification of the implications of such event. This shall also apply if an extension of the Period of Delivery has initially been agreed upon with the Buyer.
7. The Buyer may resign from the contract without fixing a time limit if complete performance is ultimately rendered impossible for the Seller prior to the transfer of risk. The Buyer may furthermore resign from the contract if execution of part of the delivery is rendered impossible for an order and if the Buyer has a legitimate interest to reject a part delivery. If this is not the case, the Buyer shall have to pay the contract price for the respective part delivery. The same shall apply in case of an inability of the Seller. In all other cases, Paragraph VII.2. "Liability" shall apply.
   In case that the impossibility or inability occurs during the default in acceptance or if the Buyer is alone or predominantly responsible for the circumstances, he shall be obliged to the performance of quid pro quo.
8. In case that the Buyer fixes a reasonable deadline for performance after the due date – taking into consideration the statutory exceptions – and if this deadline is not complied with, the Buyer shall be entitled to resignation within the scope of statutory provisions.
   Upon request of the Seller he undertakes to declare within a reasonable time whether he intends to make use of his right of resignation.
   Further claims from Default in Delivery are exclusively governed by Paragraph VII.2. hereunder.

IV. Transfer of Risk, Acceptance

1. The risk shall be transferred to the Buyer whenever the delivery item has left the factory, namely also if part deliveries are performed or if the Seller has undertaken other services, such as e.g. the forwarding expenses or shipment.
2. In case that delivery is delayed or not undertaken as a result of circumstances not to be attributed to the Seller, the risk shall be transferred to the Buyer at the day the readiness for shipment is announced. The Seller undertakes to effect insurance as requested by the Buyer at the expense of the Buyer.
3. Part deliveries shall be permissible to the extent reasonable for the Buyer.

V. Reservation of Proprietary Rights

1. The Seller reserves the proprietary right for the delivery item until any and all claims of the Seller versus the Buyer arising from the business relations have been settled, including future claims, also arising from contracts concluded simultaneously or subsequently. This shall also apply if individual or all claims of the Seller were entered into a current account and the balance has been determined and acknowledged.
   In case of behavior of the Buyer contrary to the terms of contract, particularly in case of default in payment, the Seller shall be entitled to withdrawal of the delivery item after overdue notification and the Buyer shall have the obligation to surrender the delivery item. The Buyer is obliged to immediately notify the Seller in case of seizure or other interventions of third parties.
2. The Buyer is entitled to resell the delivery item in ordinary course of business. He, however, already today cedes to the Seller any and all claims arising from the resale versus purchaser or third parties. The Buyer is entitled to collection of said claims also after cession. The authorization of the Seller for collection of the claims on his own is not affected by this.
   The Seller, however, undertakes not to collect the claims as long as the Buyer properly complies with his payment obligations or the authorization to collect has not been revoked or no application for the opening of insolvency procedures has been filed.
   The Seller may otherwise request for the Buyer to disclose the claims ceded and their debtor, providing all information required for collection, handing over all documents pertaining to this, and informing the debtors of the cession, unless already performed by the Seller.
   In case that the delivery item is resold together with merchandise that is not the property of the Seller, the claim of the Seller versus the purchaser shall be deemed to be ceded in the amount of the contract price agreed between Seller and Buyer.
3. The Buyer shall not be entitled to pledge or transfer as security the delivery item.
4. The Buyer hereby grants to the Seller a security interest in the products sold hereunder to secure payment of the price of such products and agrees, and appoints the Seller, its agent, to take all such action and to execute all such documents and instruments as may be necessary or reasonably requested by the Seller to perfect and continue perfected the Seller's security interest hereunder.
5. The Seller shall be entitled to insure the delivery item at the expense of the Buyer against theft, breakage, fire, water, and other damages, unless the Buyer has demonstrably obtained such insurance coverage on his own.
6. If, in connection with the payment of the contract price, a liability of the Seller is established for a bill-of-exchange the reservation of proprietary rights including its special forms agreed upon or other securities agreed upon to secure payment shall not expire before the bill-of-exchange has been honored by the Buyer as debtor.
7. The application for the opening of insolvency procedures shall entitle the Seller to resign from the contract and demand immediate return of the delivery item.

VI. Claims from Defects

The Seller shall warrant material defects and deficiencies in title of the delivery under exclusion of further claims – subject to Paragraph VII "Liability" – as follows:

Material Defects

1. All those parts are to be reworked or replaced by parts free of defects – which is at the discretion of the Seller – free of charge, which turn out to be defective on account of circumstances that have occurred prior to the transfer of risk. The Seller is to be informed in writing immediately whenever such defects are determined. Parts replaced shall become the property of the Seller.
2. Upon agreement with the Seller, the Buyer shall grant the Seller the time and opportunity required in order to perform any and all rework and substitute deliveries, which the Seller deems necessary, with the Seller otherwise exempted from liability for the resulting consequences. It is only in urgent cases where the operational safety is jeopardized and/or as defense against disproportionate damages – in which cases immediate notification of the Seller is mandatory – that the Buyer has the right to eliminate the defect himself or have the defect eliminated by third parties and demand compensation for expenditures incurred.

3. Regarding the direct costs resulting from rework and/or substitute delivery, the Seller shall bear the costs for the replacement part including shipment – to the extent that the complaint proves justified.
   In all other cases the Buyer shall bear the costs.
4. Within the scope of statutory provisions, the Buyer has the right to resign from the contract if the Seller – taking into account the statutory exceptions – has allowed a reasonable time fixed for rework or substitute delivery on account of material defect to expire fruitlessly.
   In case of only insubstantial defects, the Buyer only has the right for a reduction of the contract price. The right for a reduction of the contract price is otherwise excluded.
   Further claims are determined by Paragraph VII.2. hereunder.
5. No liability is assumed particularly in the following cases:
   - Unsuitable or improper use, incorrect installation and/or commissioning by Buyer or third parties, natural wear, erroneous and negligent handling, improper maintenance, unsuitable operating materials, chemical, electro-chemical or electrical impact – to the extent that they are not the responsibility of the Seller.
   - The Seller shall assume liability for defects of the material supplied by the Buyer only if the defects could have been identified, had professional diligence been applied.
   - In case of manufacturing based on drawings of the Buyer, the Seller shall assume liability only for execution in accordance with the drawings.

5a. If special tools are ordered, the actual delivery quantity is allowed to either exceed or undershoot the order quantity by approx. 10 % or a minimum of 2 units, as required.

6. In case that the Buyer or third parties perform improper rework, the Seller shall not assume any liability for the consequences that result. The same shall apply for modifications of the delivery item made without prior consent of the Seller.

Deficiencies in Title

7. The Buyer shall assume the sole responsibility for documents such as drawings, gauges, samples or the like to be submitted by the Buyer. It is the Buyer's responsibility to ensure that the workshop drawings submitted by the Buyer do not violate the copyrights of third parties. The Seller has no obligation vis-à-vis the Buyer to investigate if the submission of quotes on the basis of workshop drawings submitted to the Seller constitutes any violation of copyrights of third parties. Should a liability of the Seller nevertheless result from constitutive facts, the Buyer shall indemnify and hold harmless the Seller.

VII. Seller's Liability, Disclaimer of Liability

1. In case that the delivery item cannot be used by the Buyer in accordance with its contractual purpose by fault of the Seller as a result of negligent or incorrect execution of proposals submitted and consultations performed prior to or following the conclusion of the contract or by violation of other secondary contractual obligations – particularly instructions for operation and maintenance of the delivery item – the stipulations contained in Paragraphs VI and VII.2. shall apply under the exclusion of further claims of the Buyer.
2. The Seller shall assume liability for damages not established on the delivery item as such – on whatever legal grounds – only

a) in case of intent,
b) in case of gross negligence of the proprietor / institutions or senior executives,
c) in case of intentional or negligent violation of life, body and/or health,
d) in case of maliciously concealed defects,
e) in case of defects of the delivery item, to the extent that liability is assumed for personal injury or damage to property for privately used items in accordance with the German Product Liability Act (Produkthaftungs¬gesetz). In case of culpable breach of material contractual obligations, the Seller shall also assume liability in case of gross negligence of non-executive employees and minor negligence, in the latter case limited to reasonable, foreseeable typical contract damage.
   Further claims are excluded.

3. The Seller shall not be subject to any other obligations or liabilities, whether arising out of breach of contract, warranty, tort (including negligence and strict liability) or other theories of law, with respect to products sold or services rendered by the Seller or undertakings, acts or omissions relating thereto. Under no circumstances will the Seller be liable for any incidental or consequential damages, or for any other loss, damage or expense of any kind, including loss of profits, arising in connection with the contract or with the use or liability to use the Seller's products furnished under this contract.

VIII. Statute of Limitations

Any and all claims of the Buyer – on whatever legal grounds – come under the statutes of limitation in 12 months. The statutory time limits shall apply for claims for damages in accordance with Paragraph VII.2. a – e.

IX. Special Conditions for Machining Contracts (completion, reprocessing, modification or restoration of tools)

The following shall apply for machining contracts as a supplement to/deviating from the Terms of Delivery:

1. The subcontractor shall not assume any liability for the behavior of material submitted. His claim for remuneration remains unaffected.
2. Should the material become unusable during the machining by fault of the subcontractor, his claim for remuneration for the service rendered shall lapse. The claim for damages of the Buyer shall be governed by Paragraph VII.2. hereunder.

X. Return Policy

1. A Return Goods Authorization (RGA) number must be obtained before returning items.
2. Call 1-800-558-8966 to request a Return Goods Authorization (RGA) number. Be sure to write your RGA number on the shipping label. Returns will not be accepted unless accompanied by this number
3. Please include a copy of your invoice or packing slip.
4. Claims for discrepancies in shipment must be made within 7 days of receipt of merchandise or they will not be accepted.
5. Only items in unused condition and in undamaged, sealed original container may be returned within 30 days of the invoice date
   - 15% Restock fee, an order of equal/greater value will reduce the restock fee to 5%
   After 30 days / less than 6 month from the invoice date
   - 30% Restock fee, an order of equal/greater value will reduce the restock to 20%
6. Freight must be prepaid
7. Special orders, modified items, used items and obsolete items cannot be returned.
8. A maximum of two stock returns per year is allowed.
9. The stock return cannot exceed 10% of the past 12 month sales.
10. All stock returns must be approved by the National Sales Management.

Any deviation from the above Policy must be authorized in writing by the National Sales Management

This policy supersedes all previous policies and is effective March 13.2017

XI. Applicable Law, Place of Jurisdiction, Place of Performance

1. German Substantive Law under the exclusion of UN Purchasing Law shall apply for any and all legal relations between Seller and Buyer.
2. Should disputes arise from or in connection with the contract at hand, the parties shall first attempt to reach an out-of-court settlement. Should this not be possible, disputes shall be ultimately decided by a Court of Arbitration in accordance with the Arbitrary Court Regulation of the German Institution for Arbitration (DIS), excluding the regular legal process. The decision shall be taken by three arbitrators, with each of the two parties appointing one arbitrator and the third arbitrator selected by the two arbitrators appointed. Arbitration procedures shall be in German language and performed at the corporate seat of the exporter.
3. Place of Performance shall be 54595 Prüm, Germany.

Any and all deliveries performed shall exclusively be based on our Terms of Delivery. We hereby object to any and all contrary terms of purchase.

TERMS OF DELIVERY FOR REPAIR OF TOOLS AND OTHER CONTRACT JOBS

- The costs for tool repair and contract grinding are charged on basis of real time consumption.
- The price for tool repair and contract grinding depends mainly on quantities. If quantities mentioned in our quotation or order confirmation are not achieved we may charge a higher price for lower quantities.
- All costs and risks for transports are chargeable to the buyer.
- Contract jobs are to be payed on delivery without deduction.
- Risk for scrap on tool repairs or other contract jobs must be taken by the buyer.
- If scrap is caused by ourselves costs for contract work will not be charged. Under no circumstance we will refund scrapped parts.
- Apart from that our terms and conditions will apply.

NEUHÄUSER

represented by: CONTROX
A NEUHÄUSER COMPANY

NEUHÄUSER Präzisionswerkzeuge GmbH
Prümtalstraße 40 | D-54595 PRÜM | GERMANY
Tel. +49 (0) 65 51 | 95 23-0
Fax +49 (0) 65 51 | 95 23-22
info@neuhaeuser-controx.de
www.neuhaeuser-controx.com

CONTROX Inc.
5776 Urbana Road
Springfield, OH 45502 | USA
phone 1-800-558-8966
fax 1-800-356-0293
solutions@controx.com
www.controx.com

Effective June 2021